Onan

Wiring Diagrams

for Mobile, RV and AUX GenSets

To be used *ONLY* by

Distributor
Service Organization

or

Distributor/Dealer

Form No. 900-0186
06/89
Printed in U.S.A.

WIRING DIAGRAMS
FOR
MOBILE ELECTRIC GENERATING SETS

All the wiring diagrams in this manual apply to Onan electric generator sets used in RV, AUX, or other special Mobile applications. When using the diagrams, remember that all components are shown in their de-energized position unless otherwise noted, Find the model in question in the left hand column (which matches the generator set nameplate), then look to the right for the applicable wiring diagram number and the page where it is located. For detailed service information, refer to the Master Service Manual for the respective unit, the RV Training Manual (932-0402) and the Controls Training Manual (932-0406).

MODEL NUMBER AND SPEC LETTER	WIRING DIAGRAM	SEE PAGE
2.5AJ-1E/6000K	605-0110	8
2.5AJ-1E/12006K,M	605-0110	8
2.7AJ-1R/12020K,M,N	611-1106	52
2.7AJ-1R/16010N	611-1106	52
2.7AJ-1R/16016N	611-1106	52
3.0AJ-1R/16017P,R	611-1140	61
3.0AJ-1R/16017S	611-1148	66
3.0AJ-1R/16018D,R,S	611-1148	66
2.5LK-1E/6000K,12006K,13036K,13036M	605-0110	8
2.5LK-1E/6820K,10819K	605-0083	5
2.5LK-1E/10898K	605-0107	6
205LK-1RV6000/1E,1F,1G,7060F,7193F,7740G	610-0266	12
205LK-1RV6000/1H	610-0313	14
205LK-1RV6000/7641G	610-0310	13
205LK-1RV6000/7641H	610-0320	17
2.5LK-1,2,3R/1C	610-0266	12
2.5LK-1R/6000H,6000J,8098G,8486J,8781H,8782H,9525J, 9903H,9903J,10298H,10497H,10545L, 10545J,10689J,10801J,10850J,11215J, 11426J,12000J,12006J,12820J,13646J, 14185J,14185L	610-0315	16
2.5LK-1R/10935J	605-0108	7
2.5LK-3CR/10801J	610-0338	18
2.5LK-3CR/10850J	610-0314	15
2.5LK-3CR/12000M,1L	610-0350	19
4.0BF-1R/9000A,14122A	611-1094	51
4.0BF-1R/9000B,9000C	611-1109	53
4.0BF-1R/9500A	611-1094	51
4.0BF-1R/15203B,15203C	611-1121	54
4.0BF-3CR/16000A,16002A	611-1123	55
4.0BF-3CR/16000B,16002B,16004B	611-1127	56
4.0BF-8R/16000B,17389B,20793B	611-1127	56
4.0BFA-1R/16000A,16004A	611-1135	59
4.0BFA-1R/16004B,16004C,16004D,16012C,17389C	611-1146	64
4.0BFA-1R/16015B,16015C,16020B,16020C	611-1147	65
4.0BFA-1R/16019A,16020A	611-1138	60
4.0BFA-3CR/15000C,20275A,20275C,22353C,22593C, 25206C,25505C,26651C,27014C, 27318C,27919C,26805C	611-1142	63
4.0BFA-5DR/22540C,22541C	606-0205	9

MODEL NUMBER AND SPEC LETTER	WIRING DIAGRAM	SEE PAGE
RV Gasoline (Continued)		
4.0BGE-1R/26100A,26100B,26100C,26101A,26101B,26101C, 26102A,26109A,26109B,26109C,28202C	611-1174	76
4.0BGEL-1R/26110A,26110B,26111A,26111B,26112A	611-1174	76
5.0BGA-3CR/16000A	611-1135	59
5.0BGA-3CR/16019A,16020A	611-1138	60
5.0BGA-3CR/16004B,16004C	611-1146	64
5.0BGA-3CR/16015B,16015C,16020B,16020C	611-1147	65
4.0BGD-FB/1932A,7512A,30503A,30504A	611-1182	79
4.0BGE-1R/26100D,26100E,26101D,26101E,26109E	611-1174	76
4.0BGE-1R/26100F,26101F,26109F	611-1180	78
4.7BGE-1R/26100A,26101A	611-1174	76
4.0BGE-3CR/28202C,28202E,30981E	611-1176	77
4.0BGEL-1R/26110D,26111B,26111D	611-1174	76
5.0BGM-FA/26105A	611-1186	81
4.0CCK-**R/1J	611-0236	23
4.0CCK-1R/1J through 23J,1681J,6000J,7723J,8010J,8782J	611-0914	30
4.0CCK-1R/6000N,6000P,8643P,9290N,9525N,9525P,9625N 10108N,10108P,10298P,11411P,11497P	611-1035	36
4.0CCK-1R/8216J,8444J,9633P,9638N	611-1002	35
4.0CCK-1R/8793J,9470P,9620N,9840N,10476N,10476P, 11191P,11586P,11673P,11852P	611-1036	37
4.0CCK-1R/8815J	611-1039	39
4.0CCK-1R/9403J,10156J,10729J	611-1049	41
4.0CCK-1R/9381N	611-1054	44
4.0CCK-3R/6000J	611-0839	27
4.0CCK-3R/6000P,9381N,9381P	611-1067	46
4.0CCK-3CR/6000J	611-0975	34
4.0CCK-3CR/6000P,9525P	611-1035	36
4.0CCK-3CR/6000R,9525R,11693R,11721R,12000R,12019R, 12273R,12276R,13290R,14608R,16557R	611-1086	50
4.0CCK-3CR/17389U	611-1127	56
4.0CCK-3CR/15000U,16000U,16004U,20887U,21378U, 22650U,23659U,24044U	611-1142	63
5.0CCK-1R/1A	611-0176	22
5.0CCK-2R/1A	611-0176	22
5.0CCK-1RV6000/1J,5360J,6000J,7036J,7036P,1681J,12J	611-0914	30
5.0CCK-1RV6000/13J	611-0957	32
5.0CCK-1R/8216J,8444J,9469J,9633N	611-1002	35
5.0CCK-1R/6000N,6000P,8643P,8686P,8779J,9290N,9525N, 9525P,9625N,9641N,9701N,10108P, 10476N,10476P,10883P,11040P,11479P	611-1035	36
5.0CCK-1R/8815J	611-1039	39
5.0CCK-1R/9403J	611-1049	41
5.0CCK-1R/9470N,9470P,9620N,11191P,11852P,12015P	611-1036	37
5.0CCK-3RV/4262J,4262F,5662J	611-0676	24
5.0CCK-3RV/5121J	611-0786	25
5.0CCK-3RV/5222J	611-0801	26
5.0CCK-3RV/5605J	611-0164	21
5.0CCK-3RV/5262J	611-0871	28
5.0CCK-3CRV6000/1J,5360J	611-0839	27
5.0CCK-3CRV6000/12J	611-0975	34
5.0CCK-3RV6000/13J	611-0963	33
5.0CCK-3RV6206J,7823J	611-0902	29

MODEL NUMBER AND SPEC LETTER	WIRING DIAGRAM	SEE PAGE
RV Gasoline (Continued)		
5.0CCK-3CR/6000R,10108R,11979R,12000R,12019R,12233R, 12276R,13040R,14618R,14780R,16437R, 16557R,16778R	611-1086	50
5.0CCK-3CR/9329J,9494N	611-1047	40
5.0CCK-3CR/9403J	611-1061	45
5.0CCK-3CR/9433J,9433N	611-1050	42
5.0CCK-3CR/8793J,9525N,9620N	611-1036	37
5.0CCK-3CR/1U,2U,3U,15000U,20508U,21378U,23034U	611-1142	63
5.0CCK-4R/18089U,16000U,17386U,17789U	611-1127	56
5.0CCK-4R/23969U	611-1142	63
5.0CCK-5DR/12018R,12233R	611-1086	50
5.0CCK-5DR/17233U	611-1127	56
6.0CCKB-3R/6000B,7821B,8327B	611-0955	31
6.0CCKB-3R/6000C,6000D,7821C,7821D,8327C,8779B,9525C 9525D,9525E,10339C,11544D,12000D, 12000E	611-1037	38
7.5DKD-FJ/27798C,27799C	AC 612-6184	82
7.5DKD-FJ/27798C,27799C	DC 612-6353	83
8.0DKD-3CR/29686B	AC 612-6442	85
8.0DKD-3CR/29686B	DC 612-6441	84
8.0DKD-FJ/29686C,32448C	AC 612-6442	85
8.0DKD-FJ/29686C,32448C	DC 612-6441	84
15.0DL3-J/30437A,30438A	AC 612-6460	86
15.0DL3-J/30437A,30438A	DC 612-6442	85
2.2KV-FA/26100A	610-0375	20
2.8KV-FA/26100A	610-0375	20
6.0NH-1R/9000A,9500A	611-1094	51
6.0NH-1R/9000E,9000G,9000H	611-1109	53
6.5NH-3CE/10000D,21880L	606-0215	11
6.5NH-3CE/16375D,16777D	606-0209	10
6.5NH-3CR/6000A,10005A	611-1052	43
6.5NH-3CR/6000B,6000C,8686C,10005C,10182C,10621C, 11590C,11632C,11845C	611-1079	48
6.5NH-3CR/10250A	611-1076	47
6.5NH-3CR/10760C	611-1080	49
6.5NH-3CR/1D,9D,12D,13D,14D,6000D,12000D,12230D, 12894D,15336D	611-1086	50
6.5NH-3CR/15000D,15000L,18768L,19701L,23033L, 23034L,25051P	611-1142	63
6.5NH-3CR/16000J,16002J,16004J,17789J,18629J	611-1127	56
6.5NH-3CR/16000A,16000K,16004K	611-1135	36
6.5NH-3CR/16004M,16004N,16004P,16013P,26785P	611-1146	64
6.5NH-3CR/16019K,16020K,20909K	611-1138	60
6.5NH-3CR/16020M,16020N,16020P	611-1147	65
6.5NH-3CR/17198D,18105D,18106D	611-1134	58
6.3NHEL-1R/26110D,26111D	611-1174	76
6.5NHEL-1R/26110C,26111C	611-1174	76
6.5NHE-1R/26100C	611-1174	76
6.5NHE-1R/26100D,26100E,26101D	611-1180	78
6.5NHE-FA/26101E	611-1180	78
6.5NHE-3CR/30982C,30983C	611-1176	77

MODEL NUMBER AND SPEC LETTER	WIRING DIAGRAM	SEE PAGE
RV Gasoline (Continued)		
6.3NHL-3CR/16013P	611-1167	73
6.3NHL-3CR/16014P	611-1169	74
6.3NHEL-1R/26110A,26111A	611-1174	76
6.5NHE-1R/26100A.26101A	611-1174	76
AUX Sets		
4.0BFA-1R/23000C,23001C,23003C,23004C	611-1160	69
6.5NH-3CR/23000P,23001P,23002P,23003P,23004P	611-1160	69
3.0RDJA-1R/23001U	611-1163	70
4.0DKC-3CR/23006B[1],23007B[2]	AC 612-6184	82
7.5DKD-3R/23008B,23009B	AC 612-6184	82
7.5DKD-3R/23008B,23009B	DC 612-6353	83
7.5DKD-3CR/23006B[1],23007B[2]	DC 612-6353	83
7.5DKD-5DR/23006B	AC 612-6184	82
7.5DKD-5DR/23006B	DC 612-6353	83
7.5DKD-FB/23006C,23007C,23008C,23009C	AC 612-6184	82
7.5DKD-FB/23006C,23007C,23008C,23009C	DC 612-6353	83
Diesel RV Sets		
7.5DKD-3CR/27798A[1],27798B[2]	AC 612-6184	82
7.5DKD-3CR/27799A[1],27799B[2]	DC 612-6353	83
7.5DKD-FJ/27798C,27799C	AC 612-6184	82
7.5DKD-FJ/27798C,27799C	DC 612-6353	83
8.0DKD-3CR/29686B	AC 612-6442	85
8.0DKD-3CR/29686B	DC 612-6441	84
8.0DKD-FJ/29686C,32448C	AC 612-6442	85
8.0DKD-FJ/29686C,32448C	DC 612-6441	84
15.0DL3-J/30437A,30438A	AC 612-6442	85
15.0DL3-J/30437A,30438A	DC 612-6460	86
12.0RDJC-3R/21680AC	612-5787	71
Mobile and Commercial Units		
4.0BFA-5DR/29309D (Time Manufacturing)	611-1142	63
4.5BGD-FB/1A,30502A	611-1182	79
4.5BGD-FD/1A,30502A	611-1184	80
6.5NH-5DR/26725P (Gen Cable)	611-1170	75
6.3NHD-FB/1932A,1932B,7512A,7512B,30503A,30503B, 30504A,30504B	611-1182	79
6.5NHD-FB/1A,1B,30502A,30502B	611-1182	79
6.5NHD-FD/1A,1B,30502A,30502B	611-1184	80

REPLACEMENT CONTROLS FOR 300-0859 PRINTED CIRCUIT BOARD

KIT NUMBER			
300-1598	CCK,NH with Onan Choke (RV)	611-1141	62
300-1599	CCK,NH with Sisson Choke (RV)	611-1141	62
300-2026	CCK,NH with Onan Chike & Start-Disconnect for RV	611-1157	68
300-2027	CCK,NH with Sisson Choke & Start-Disconnect for RV	611-1157	68
300-1884	Standard CCK,NH with Onan Choke	611-1152	67
300-1885	Standard CCK,NH with Thermo-Magnetic Choke	611-1152	67

[1]=STD FAN ROTATION
[2]=REV FAN ROTATION

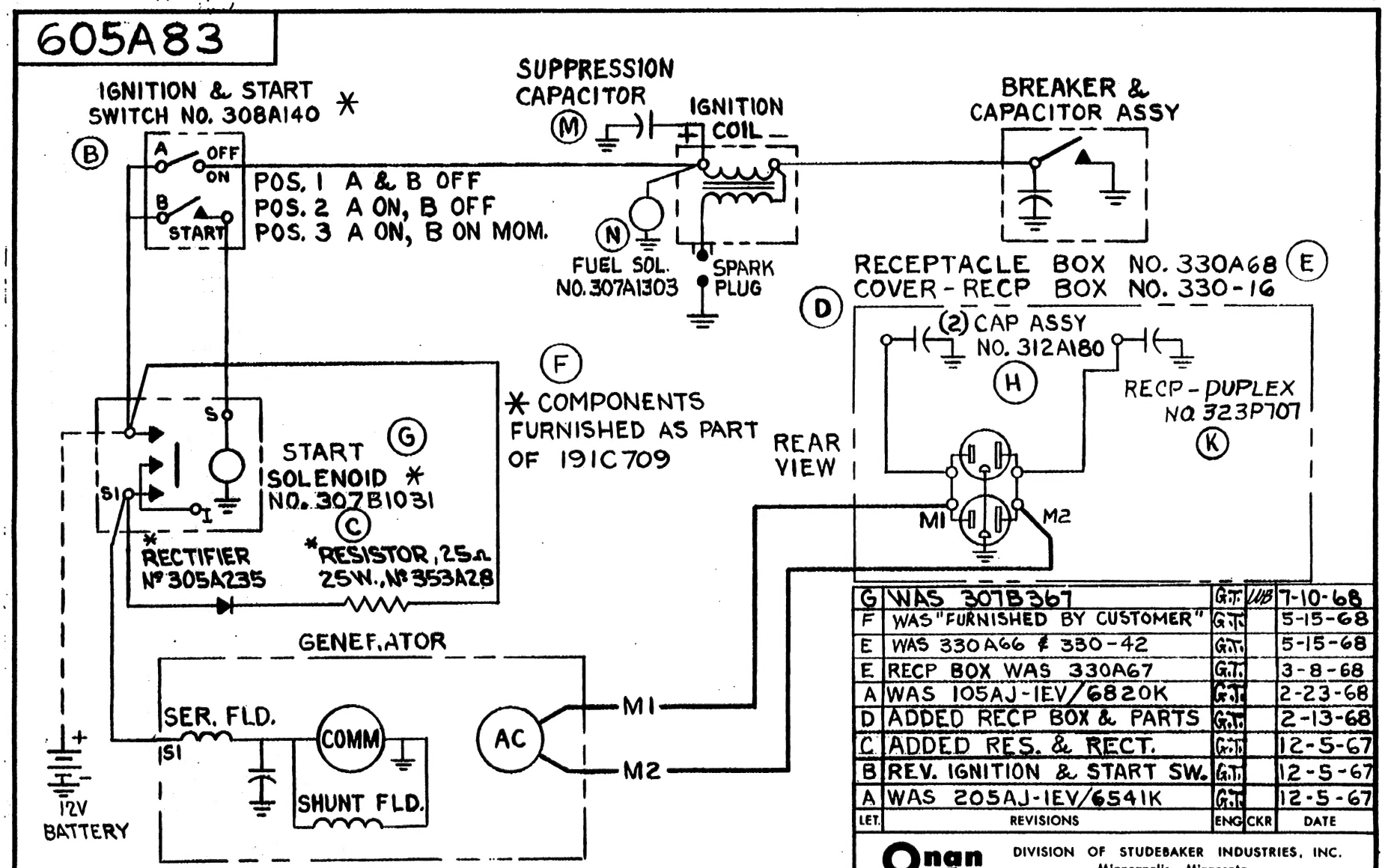

LET.	REVISIONS	ENG	CKR	DATE
G	WAS 307B367	G.T.	WB	7-10-68
F	WAS "FURNISHED BY CUSTOMER"	G.T.		5-15-68
E	WAS 330A66 & 330-42	G.T.		5-15-68
E	RECP BOX WAS 330A67	G.T.		3-8-68
A	WAS 105AJ-1EV/6820K	G.T.		2-23-68
D	ADDED RECP BOX & PARTS	G.T.		2-13-68
C	ADDED RES. & RECT.	G.T.		12-5-67
B	REV. IGNITION & START SW.	G.T.		12-5-67
A	WAS 205AJ-1EV/6541K	G.T.		12-5-67

N	ADDED FUEL SOLENOID	G.T.		9-10-74
M	ADDED CAPACITOR	G.T.		12-10-71
L	ADDED 50 CY	G.T.	JD	6-9-70
K	WAS 323-184	G.T.	WB	4-24-70
J	ADDED DASH NO	G.T.	JD	4-23-70
H	CAP ASSY WAS 312A52	G.T.		10-31-68
C	REVERSED RES. & RECT.	G.T.		8-23-68

NOTE: AC LEAD UNGROUNDED IN GENERATOR

J	L	A
-01	120 V., 1 PH., 2 W., 50/60 CY.	

Onan DIVISION OF STUDEBAKER INDUSTRIES, INC. Minneapolis, Minnesota

DATE	DR.	ENGR.	CKR.	SC.
10-24-67	CDR	G.F.T.	WJB	~

NAME: WIRING DIAGRAM ENG. - GEN. CONTROL

MODEL: 205AJ-1EV/6820K

DWG. NO. 605A83

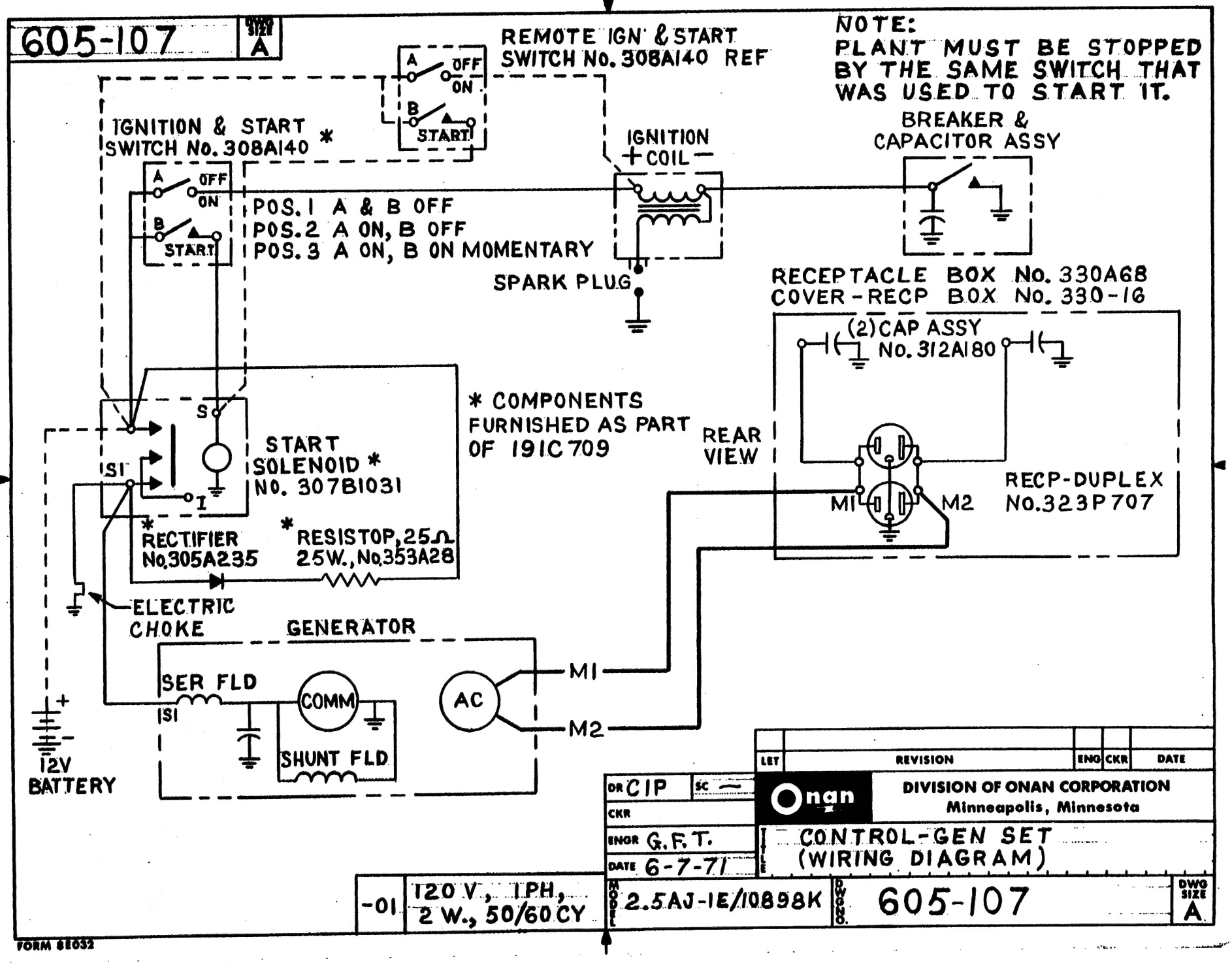
605-107
DWG SIZE A
REMOTE IGN & START SWITCH No. 308A140 REF
A OFF ON
B START
NOTE:
PLANT MUST BE STOPPED BY THE SAME SWITCH THAT WAS USED TO START IT.
IGNITION & START SWITCH No. 308A140 *
A OFF ON
B START
POS. 1 A & B OFF
POS. 2 A ON, B OFF
POS. 3 A ON, B ON MOMENTARY
IGNITION COIL
SPARK PLUG
BREAKER & CAPACITOR ASSY
RECEPTACLE BOX No. 330A68
COVER-RECP BOX No. 330-16
(2) CAP ASSY No. 312A180
* COMPONENTS FURNISHED AS PART OF 191C709
S
SI
I
START SOLENOID * No. 307B1031
REAR VIEW
M1
M2
RECP-DUPLEX No. 323P707
* RECTIFIER No. 305A235
* RESISTOR, 25Ω 25W., No. 353A28
ELECTRIC CHOKE
GENERATOR
SER FLD
SI
COMM
SHUNT FLD
AC
M1
M2
12V BATTERY
LET REVISION ENG CKR DATE
DR CIP SC —
CKR
ENGR G.F.T.
DATE 6-7-71
Onan DIVISION OF ONAN CORPORATION Minneapolis, Minnesota
TITLE CONTROL-GEN SET (WIRING DIAGRAM)
-01 120 V, 1PH, 2 W., 50/60 CY
MODEL 2.5AJ-1E/10898K
DWG NO. 605-107
DWG SIZE A
FORM 8E032

605A108

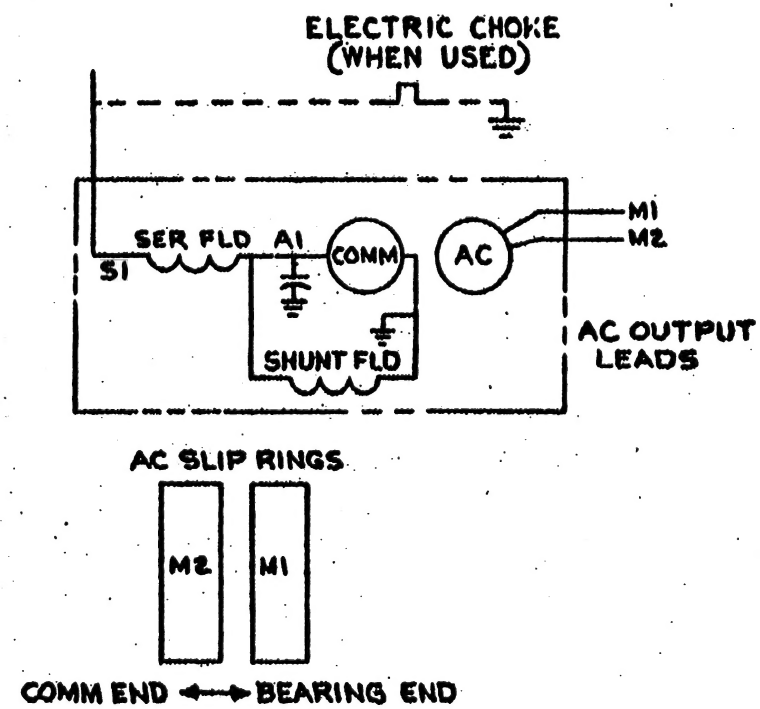

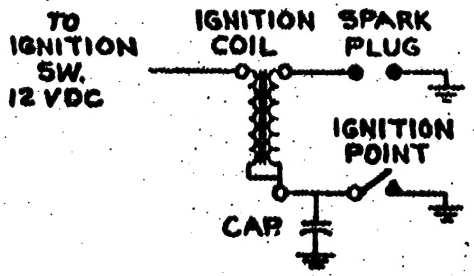

M2 GROUNDED AC LEAD, M1
HAS 0.1 MFD CAPACITOR TO GROUND

LET.	REVISIONS	ENG.	CKR.	DATE

Omcn DIVISION OF STUDEBAKER INDUSTRIES, INC.
Minneapolis, Minnesota

DATE	DR.	ENGR.	CKR.	SC.
6-16-71	CDR	G.F.T.		

NAME ENGINE GEN SET
(WIRING DIAGRAM)

MODEL	DWG. NO.
2.5LK-IR/10935J	605A108

FORM 88032

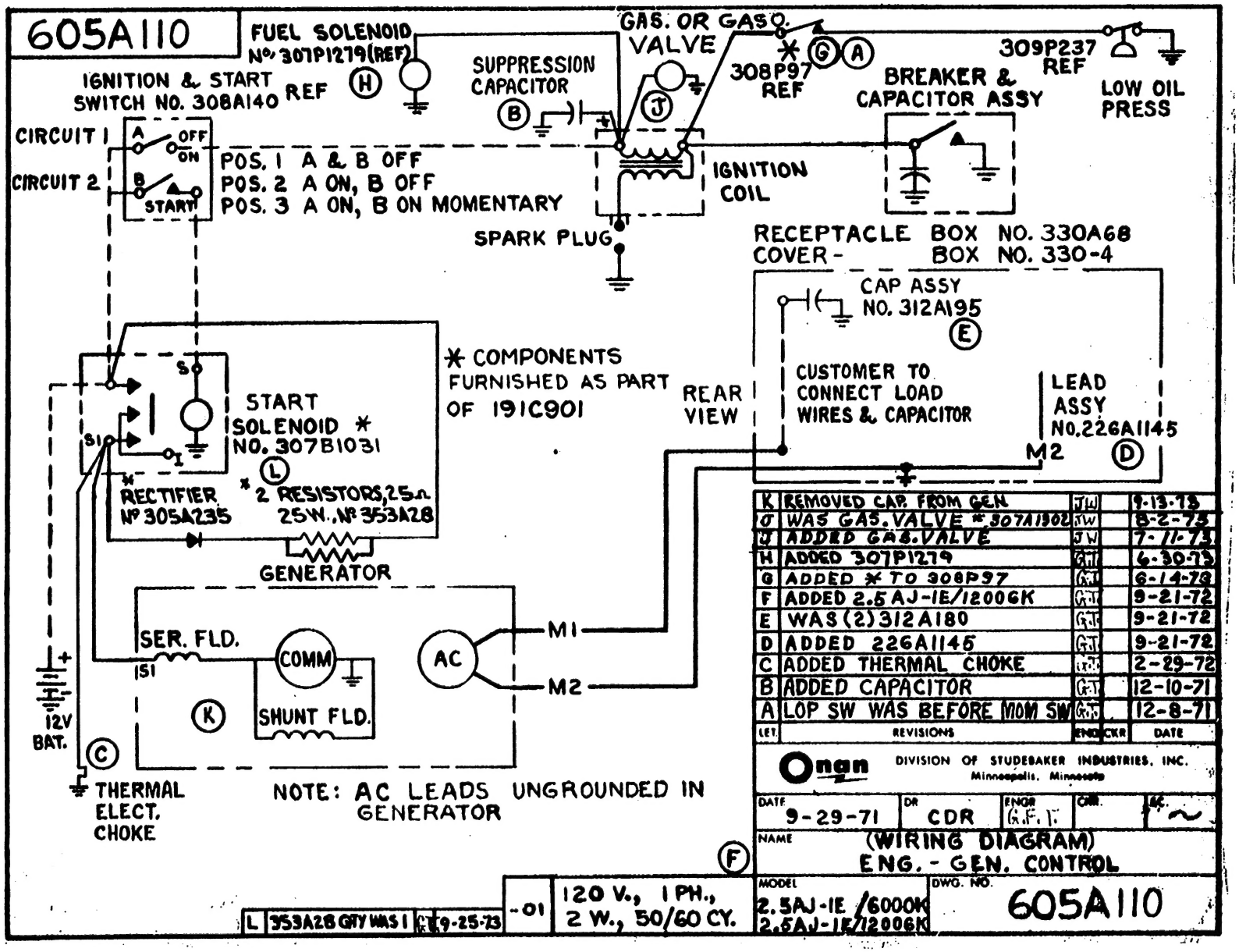
605A110
FUEL SOLENOID
Nº 307P1279 (REF) H
IGNITION & START
SWITCH NO. 308A140 REF
CIRCUIT 1
CIRCUIT 2
A OFF ON
B START
POS. 1 A & B OFF
POS. 2 A ON, B OFF
POS. 3 A ON, B ON MOMENTARY
SUPPRESSION
CAPACITOR
B
GAS. OR GASO.
VALVE
J
SPARK PLUG
IGNITION
COIL
308P97
REF
G A
BREAKER &
CAPACITOR ASSY
309P237
REF
LOW OIL
PRESS
RECEPTACLE BOX NO. 330A68
COVER - BOX NO. 330-4
CAP ASSY
NO. 312A195
E
CUSTOMER TO
CONNECT LOAD
WIRES & CAPACITOR
LEAD
ASSY
NO. 226A1145
D
M2
REAR
VIEW
* COMPONENTS
FURNISHED AS PART
OF 191C901
START
SOLENOID *
NO. 307B1031
L
S
S1
I
RECTIFIER
Nº 305A235
* 2 RESISTORS, 25Ω
25W., Nº 353A28
GENERATOR
SER. FLD.
S1
COMM
SHUNT FLD.
K
AC
M1
M2
12V
BAT.
C
THERMAL
ELECT.
CHOKE
NOTE: AC LEADS UNGROUNDED IN
GENERATOR
F
K REMOVED CAP. FROM GEN. JW 9-13-73
J WAS GAS. VALVE * 307A1302 JW 8-2-73
J ADDED GAS. VALVE JW 7-11-73
H ADDED 307P1279 GFT 6-30-73
G ADDED * TO 308P97 GFT 6-14-73
F ADDED 2.5 AJ-IE/1200GK GFT 9-21-72
E WAS (2) 312A180 GFT 9-21-72
D ADDED 226A1145 GFT 9-21-72
C ADDED THERMAL CHOKE GFT 2-29-72
B ADDED CAPACITOR GFT 12-10-71
A LOP SW WAS BEFORE MOM SW GFT 12-8-71
LET. REVISIONS ENGR CKR DATE
Onan DIVISION OF STUDEBAKER INDUSTRIES, INC.
Minneapolis, Minnesota
DATE 9-29-71
DR CDR
ENGR G.F.T.
NAME (WIRING DIAGRAM)
ENG. - GEN. CONTROL
MODEL 2.5AJ-IE/6000K 2.5AJ-IE/1200GK
DWG. NO. 605A110
L 353A28 QTY WAS 1 GFT 9-25-73
-01
120 V., 1 PH.,
2 W., 50/60 CY.

606-0205 B

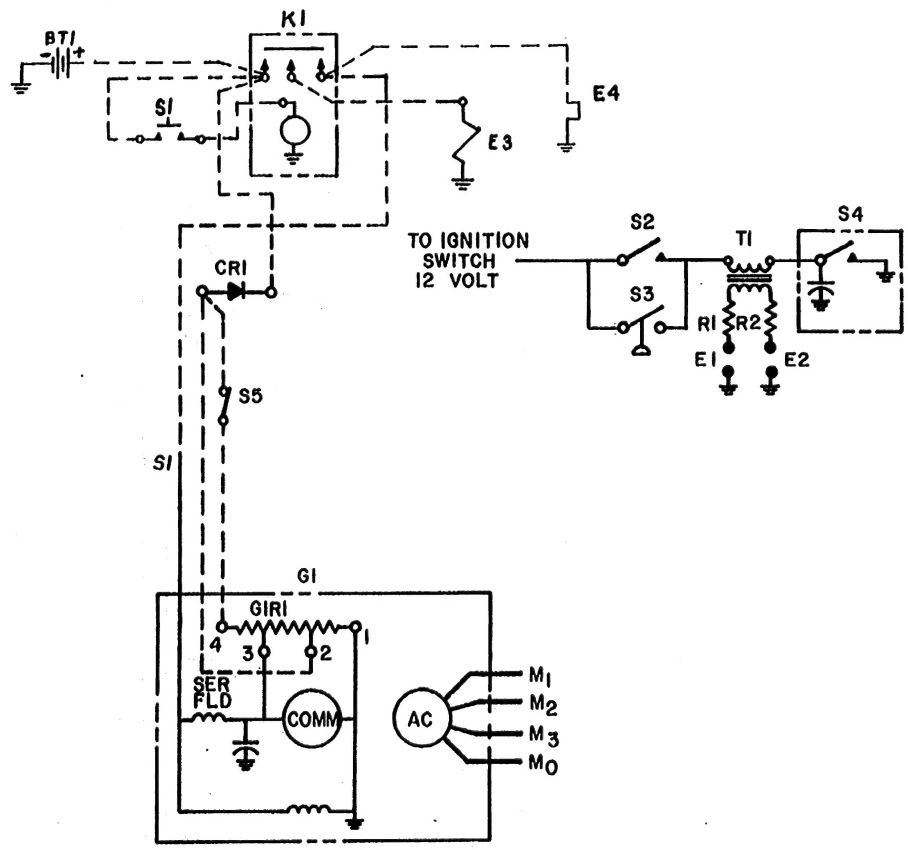

M_0 GROUNDED AC LEAD

	PARTS LIST			
	REF. DES.	PART NO.	QTY	DESCRIPTION
*	CR1		1	RECTIFIER AND HEAT SINK
*	BT1		1	BATTERY
	E1, E2		2	SPARK PLUG
**	E3		1	CHOKE - SISSON
	G1		1	GENERATOR
	GIR1		1	RESISTOR-GENERATOR
	R1, 2		2	LEAD ASSY
*	S1		1	SWITCH-START
	S2		1	SWITCH-OIL PRESS BY PASS
	S3		1	SWITCH-OIL PRESS
	S4		1	BREAKER & CAP ASSY
	S5		1	SWITCH-HIGH CHARGE RATE
	T1		1	COIL-IGNITION
B **	E4		1	CHOKE-ONAN
	K1		1	RELAY - START SOLENOID

* SUPPLIED BY CUSTOMER

** WHEN USED

3718	B	ADDED E4 RW		10-6-80
	A	ADDED START SOLENOID	GT	7-2-73
ER	LET.	REVISION	CKD	DATE

Onan DIVISION OF STUDEBAKER CORPORATION Minneapolis, Minnesota

MODEL NO. 4.0CCK-5DE/13495R	DATE 6-11-73	DR JTM	CKD G.F.T.
	NAME CONTROL-GEN SET (WIRING DIAGRAM)		
120/240V., 3 PH., 4W., 60Hz Δ	DWG. NO. 606-0205		B

HUNTSVILLE

606-0205

FORM 8A090

606-0209

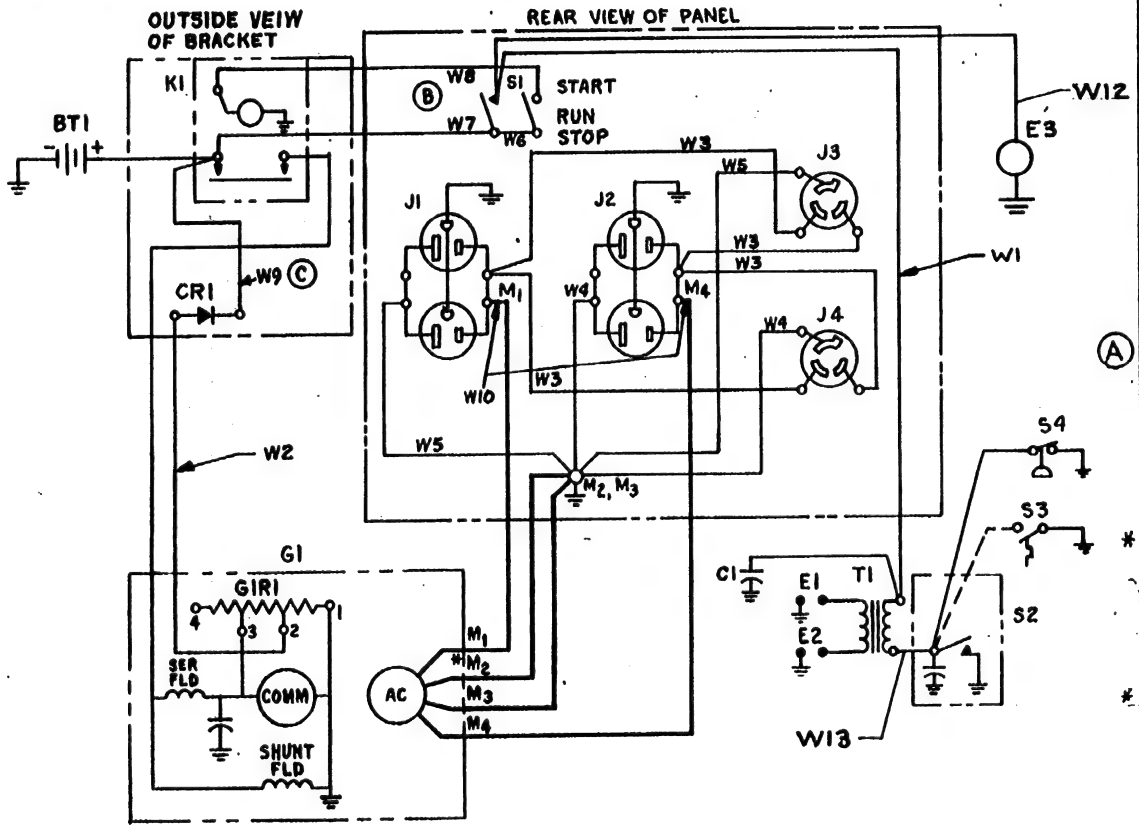

* GROUNDED AC LEAD, OTHERS HAVE .1 MFD CAPACITOR TO GROUND IN GEN

PARTS LIST

REF. DES.	PART NO.	REV REF	QTY.	DESCRIPTION
A1	300-1318	D	1	CONTROL ASSY
CR1	305-0235 REF	A	1	RECTIFIER
	305-0254 REF	A	1	BRKT-RECTIFIER MTG.
J1, J2	323-0184 REF	P	2	RECEPTACLE, DUPLEX, 120 V
J3, J4	323-0855 REF	P	2	RECEPTACLE TWISTLOCK, 240V
K1	307-1031 REF	B	1	SOLENOID
S1	308-0140 REF	A	1	SWITCH-START STOP RUN
W1	336-1195 REF	A	1	LEAD ASSY
W2	336-1889 REF	A	1	LEAD ASSY
W3	336-2127 REF	A	4	LEAD ASSY
W4	336-1570 REF	A	2	LEAD ASSY
W5	336-1588 REF	A	2	LEAD ASSY
W6	337-0088 REF	A	1	LEAD ASSY
W7	336-1979 REF	A	1	LEAD ASSY
W8	336-0368 REF	A	1	LEAD ASSY
W9	226-1155 REF	A	1	LEAD ASSY
W10	308-0003 REF	A	2	JUMPERS
W11	338-0842 REF	B	1	HARNESS MOD.
W12	336-1802 REF	A	1	LEAD ASSY
W13	336-0421 REF	A	1	LEAD ASSY
ENG GEN PARTS LIST				
BT1			1	BATTERY
C1			1	CAPACITOR-0.1 MFD
E1, 2			2	SPARK PLUG
G1			1	GENERATOR
GIR1			1	RESISTOR-GENERATOR
S2			1	BREAKER & CAP ASSY
* S3			1	HATKO
S4			1	LOPKO
T1			1	COIL-IGNITION
E3			1	ELECTRIC FUEL PUMP

(A)

* WHEN USED

LTR.	REVISION	CKD	DATE
C	ADDED W9	CKD WY	3-26-77
B	REVISED S1 WIRING	CKD WY	3-26-77
A	ADDED ITEMS W12, W13	WY	10-2-75

Onan DIVISION OF STUDEBAKER CORPORATION Minneapolis, Minnesota

MODEL NO.	DATE	SH	REV
-01 6.5 NH-3CE/16375 D	9-3-75	2	WMY WS

NAME: CONTROL - GEN SET (WIRING DIAGRAM)

120/240 V, 1 PH, 4 W, 60 CY

DWG. NO. 606-0209 B

606-0209

606-0215 REV C

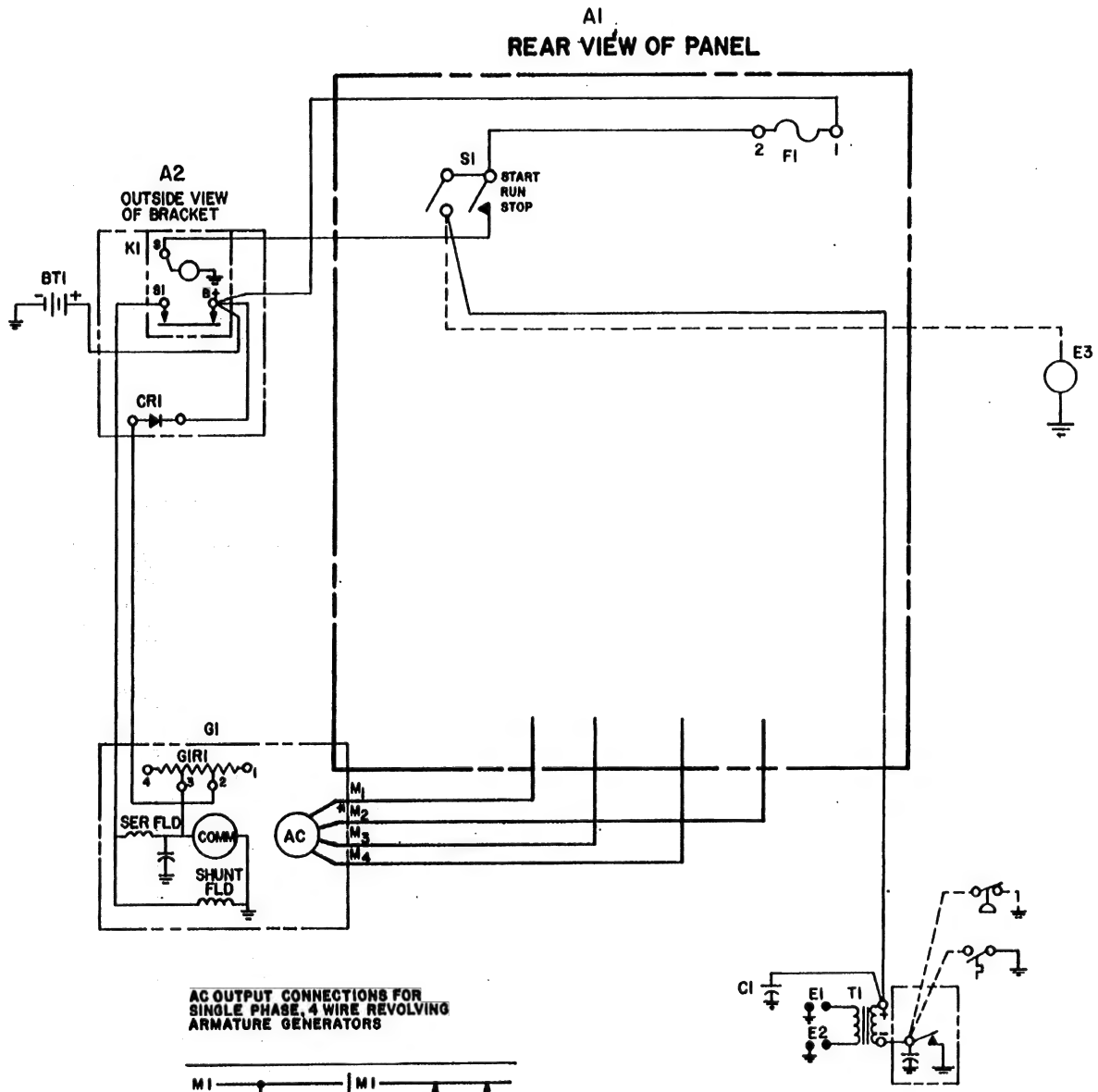

AC OUTPUT CONNECTIONS FOR SINGLE PHASE, 4 WIRE REVOLVING ARMATURE GENERATORS

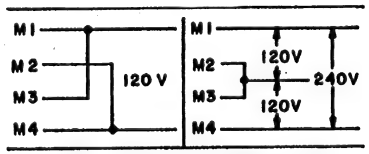

NOTE: M2 LEAD IS INTERNALLY GROUNDED IN GENERATOR

PARTS LIST

REF DES	PART NO.	CTL	QTY	DESCRIPTION
A1	300-2018	C	1	PANEL ASSY
A1	300-2019	D	1	CONTROL ASSY
	ALL PART NOS LISTED BELOW ARE REF ONLY			
CR1	357-0030	P	1	RECTIFIER – SILICON
K1	307-1031	B	1	SOLENOID
S1	308-0140	A	1	SWITCH-TOGGLE (START RUN STOP)
W11	338-0642	B	1	HARNESS-AC OUT PUT
F1	321-0174	P	1	FUSE 5 AMP
	ENG GEN PARTS LIST			
BT1			1	BATTERY
C1			1	CAPACITOR – 0.1 MFD
E1,2			2	SPARK PLUG
G1			1	GENERATOR
GR1			1	RESISTOR-GENERATOR
S3			1	BREAKER & CAP ASSY
S4			1	HATKO
S5			1	LOPKO
T1			1	COIL – IGNITION
E3			1	ELECTRIC FUEL PUMP

606-0215

NOTES:

1.

1219	–	RLSE FOR PROD		
ER	LET	REVISION /	CHGR	CKR	DATE

Onan DIVISION OF ONAN CORPORATION Minneapolis, Minnesota

DATE 10-7-79 DR RK CHK WMK CKR KD COR

CONTROL-GEN SET (WIRING DIAGRAM)

SEPIA FROM 606-0214

DWG NO. 606-0215

DWG SIZE C

STAMP REL WH 11-14-79 DASH NO. -01 MODEL NO. 6.5NH-3CE/21880L

PARTS PO

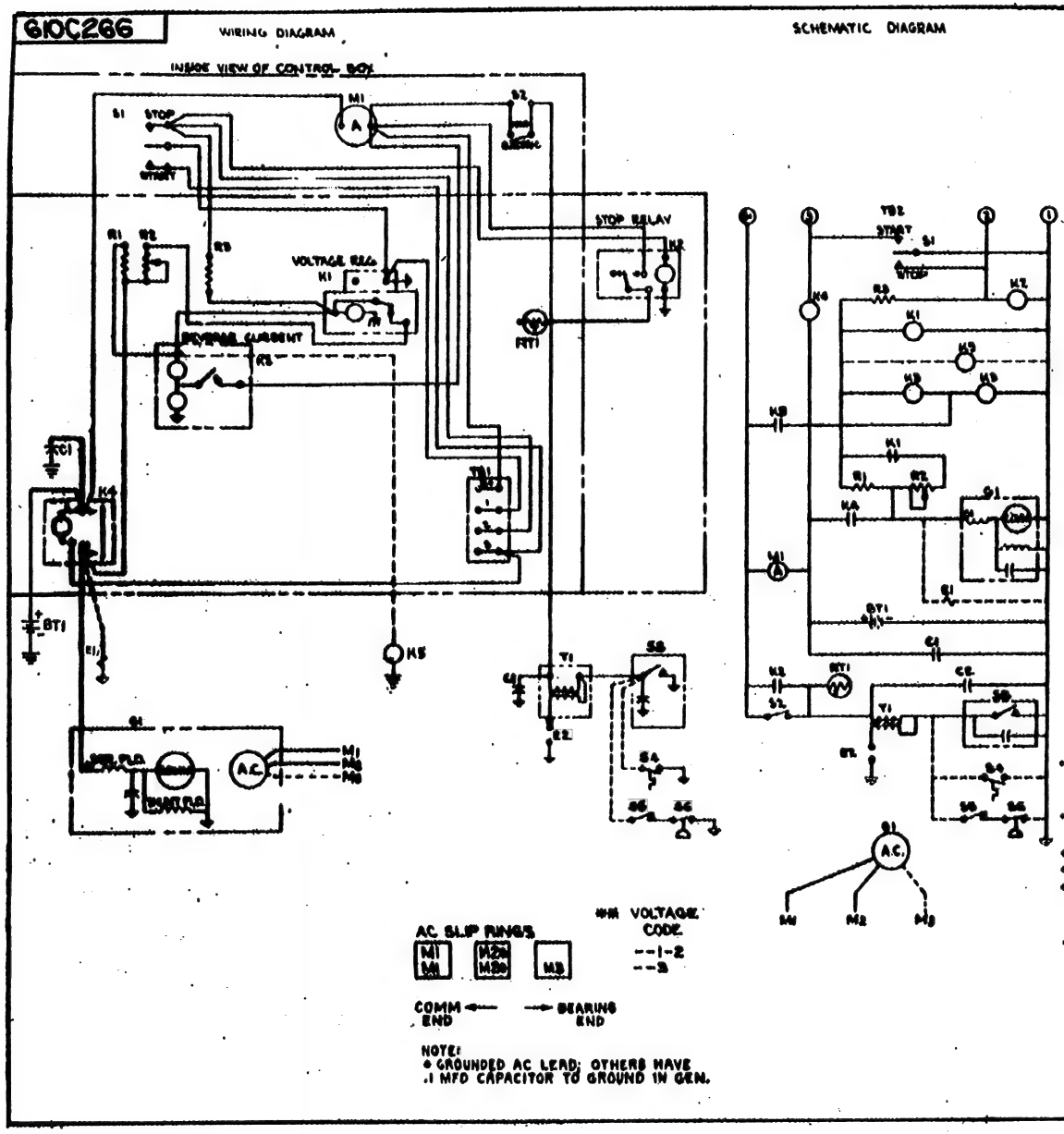

PARTS LIST

REF. DES	PART NO.	QTY.	DESCRIPTION
C1	312A155	1	CAPACITOR ASSY, 1.0 MFD
K1	305A1	1	RELAY - 2 STEP VOLTAGE REG
K2	307A1115	1	RELAY & LEAD ASSY - STOP
	307B253 (REF)	1	RELAY - STOP
K3	307B180	1	RELAY - REVERSE CURRENT
K4	307B1046	1	RELAY - START SOLENOID
M1	302A58	1	AMMETER - CHARGE 10-0-10
	304B683	1	RESISTOR & LEAD ASSY
R1	304A344 (REF)	1	RESISTOR, 1 Ω, 25W
R2	304A175 (REF)	1	RESISTOR, 1 Ω, 50W
	308B292	1	SWITCH ASSY - RMT START
S1	308P154 (REF)	1	SWITCH - STOP START
R3	304A251 (REF)	1	RESISTOR, 30 Ω, 5W
	308B291	1	SWITCH & RESISTOR ASSY
S2	308P2 (REF)	1	SWITCH - HAND ELEC START
RT1	304A60 (REF)	1	RESISTOR, 1.72 Ω, 25W
TB1	332A537	1	TERMINAL BLOCK
	332A566	1	MARKER STRIP
W1	336A1432	1	LEAD ASSY
W2	336A1263	1	LEAD ASSY
W3	336A1430	1	LEAD ASSY
W4	336A565	1	LEAD ASSY
W5	336A1045	1	LEAD ASSY
W6	336A1431	1	LEAD ASSY
	301C1160	1	CONTROL BOX & PANEL ASSY
	301B1198	1	MTG BRACKET
	301C1244	1	COVER
	301B1271	1	ENDPLATE
	98A1012	1	SILK SCREEN
	98A1144	1	SILK SCREEN
	PARTS LIST (ENG-GEN)		9920019
BT1		1	BATTERY 12 VOLT
C2	312A99 (REF)	1	CAPACITOR 9.1 MFD
E1		1	ELECTRIC CHOKE
E2		1	SPARK PLUGS
G1		1	GENERATOR
K5	307P312 (REF)	1	FUEL SOLENOID
S3		1	BREAKER & CAP ASSY
* S4	309A2 (REF)	1	SWITCH - HIGH AIR TEMP.
* S5	308-97 (REF)	1	SWITCH
* S6	309A10 (REF)	1	SWITCH - LOW OIL PRESS.
T1		1	IGNITION COIL - (ONAN)

* WHEN USED

01	8.5LK-5WR/K2	10-2-70	D.H. / G.P.T.
		CONTROL-GEN SET (WIRING DIAGRAM)	
		610C266	

610C310

WIRING DIAGRAM

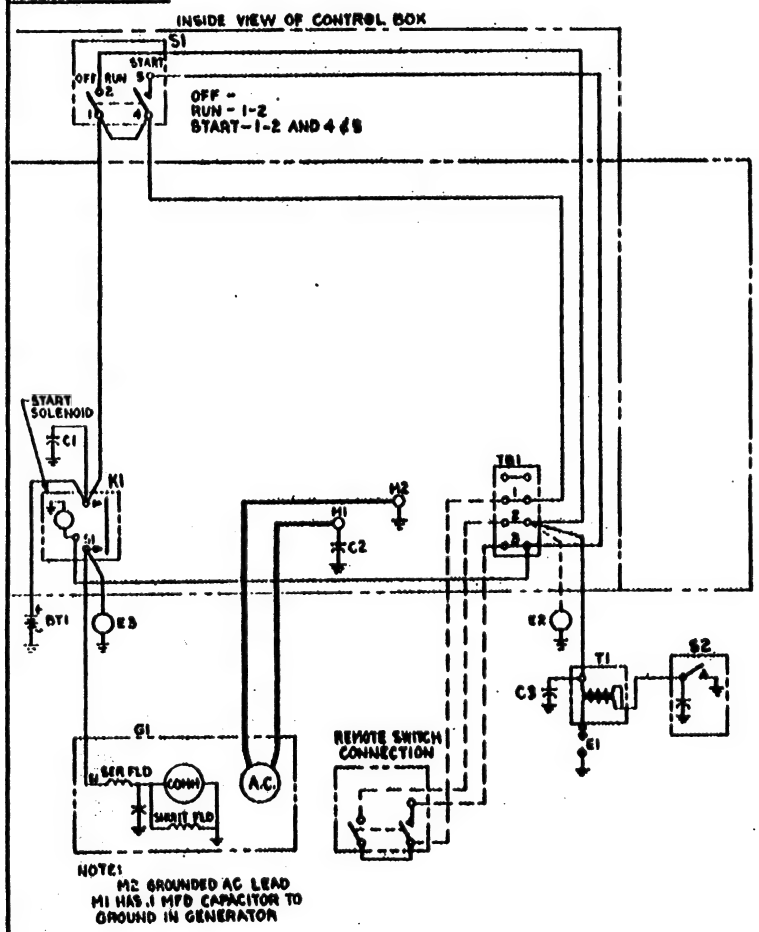

SCHEMATIC DIAGRAM

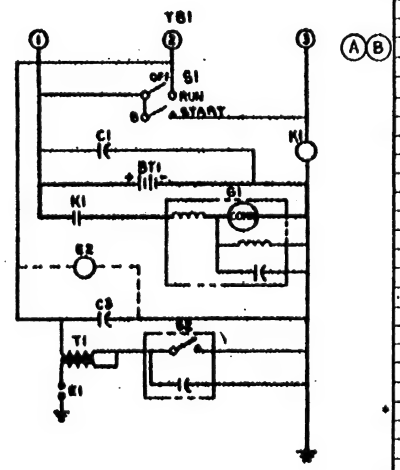

PARTS LIST

REF. DES.	PART NO.	QTY.	DESCRIPTION
C1	312A57	1	CAPACITOR 1.0 MFD.
C2	312A58	1	CAPACITOR 0.1 MFD.
K1	307B514	1	RELAY - START SOLENOID
S1	300A140	1	SWITCH - TOGGLE
	98A2101	1	SILKSCREEN
TB1	332A537	1	TERMINAL BLOCK
	332A540	1	MARKER STRIP (BLANK OUT "D")
	332-142	2	TERMINAL
	301C1180	1	CONTROL BOX & PANEL ASSY
	517-9	1	DOT BUTTON
	517-19	1	DOT BUTTON
	301B1198	1	MTG BRACKET
	301C1244	1	COVER
	301B1271	1	ENDPLATE
	PARTS LIST (ENG-GEN)		
BT1		1	BATTERY, 12-VOLT
C3	312A35	1	CAPACITOR 0.1 MFD
E1		1	SPARK PLUG
* E2		1	FUEL PUMP
G1		1	GENERATOR
S2		1	BREAKER & CAP ASSY.
T1		1	IGNITION COIL - (OHAN)
E3		1	ELECTRIC CHOKE

* WHEN USED

NOTE:
UNLESS OTHERWISE NOTED, ALL COMPONENTS ARE SHOWN IN THE DE-ENERGIZED POSITION.

B	ADDED S2 & A2.01		
A	ADDED 300A141, PLATE		
	REVISION		
		8-27-68	2/3	F.T.	W.B.
205LK-1RV6000/76416	WIRING & SCHEMATIC DIAGRAM ENG-GEN CONTROL	
120V, 1 PH, 2 W, 60 CY	610C310	

610C313

WIRING DIAGRAM
INSIDE VIEW OF BOX
TOP

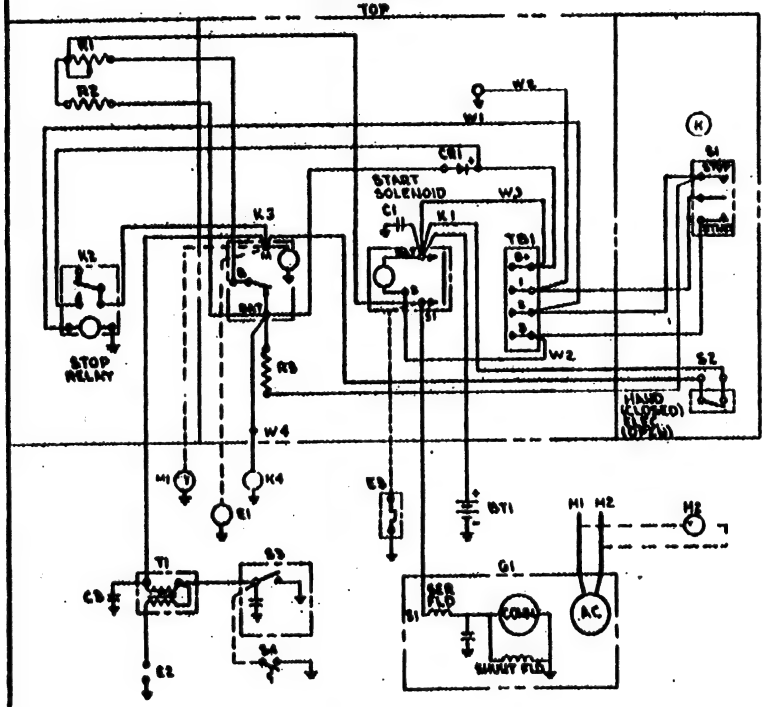

SCHEMATIC

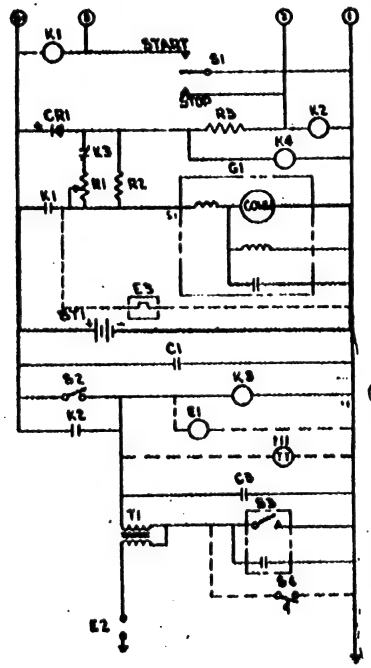

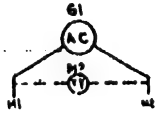

NOTE:
M2 IS GROUNDED AC LEAD
M1 HAS A .1 MFD CAPACITOR TO GROUND IN GENERATOR.

PARTS LIST

	REF. DES.	PART NO.	QTY.	DESCRIPTION
	C1	312A185	1	CAPACITOR ASSY
		305A494	1	DIODE ASSY
	CR1	305B235(REF)	1	DIODE-REVERSE CURRENT
		305A254(REF)	1	HEAT SINK
N	K1	307B.046	1	RELAY-START SOLENOID
		307A1120	1	RELAY & LEAD ASSY-STOP
	K2	307B253(REF)	1	RELAY-STOP
	K3	305B383	1	RELAY-2 STEP VOLTAGE
		304A681	1	RESISTOR ASSY
	R1	304A175(REF)	1	RESISTOR ADJ. 1 OHM, 50 W
	R2	304A344(REF)	1	RESISTOR-FIXED 1 OHM, 25 W
		338A234	1	SWITCH ASSY RMT START
	S1	308P154(REF)	1	SWITCH-START2STOP
	R3	331A251 (REF)	1	RESISTOR 30 OHM 5 W
		358A300	1	SWITCH & LEAD ASSY
	S2	308P2 (REF)	1	SWITCH (HAND-ELECT START)
	TB1	332A537	1	TERMINAL BLOCK
		332A566	1	MARKER STRIP
	W1	336A2024	1	LEAD ASSY 18
	W2	336A1045	2	LEAD ASSY 8
	W3	336A2023	1	LEAD ASSY 12
V	W4	336A1590	1	LEAD ASSY 22
		301D3101	1	CONTROL BOX
		301B3102	1	COVER
		98A2117	1	SILKSCREEN
B		332-517	1	TERMINAL
D		508-1	3	GROMMET
		PARTS LIST (ENG-GEN)(REF)		
	BT1		1	BATTERY-12 VOLT
	C3	312A162(REF)	1	CAPACITOR 0.1 MFD
+	E1		1	FUEL PUMP
	E2		1	SPARK PLUG
+	E3		1	CHOKE-ELECT
	G1		1	GENERATOR
	S3		1	BREAKER & CAP ASSEMBLY
+	S4	309A2 (REF)	1	SWITCH-HIGH AIR TEMP
H				
J				
	T1		1	IGNITION COIL (ONAN)
E +	K4	307P312 (REF)	1	SOLENOID-FUEL (GAS)
U		307P127 (REF)	1	SOLENOID FUEL (GASOLINE)
+	M1		1	METER--RUNNING TIME, 12 VDC
M +	M2		1	METER-RUNNING TIME, AC

610C313

+ WHEN USED

NOTE:
UNLESS OTHERWISE NOTED ALL COMPONENTS ARE SHOWN IN THE DE-ENERGIZED POSITION

REV.	DESCRIPTION	DATE	BY
V	ADDED 336A1590		
U	ADDED 307P127 (REF)		
P	ADDED M2		
N	ADD 307B046		
M	ADD M1 TIME		
L	GENERAL REV		
K	DIV 1 (ONAN) SW SD, TB1		
H	TB POINTS ON W1, TB1		
J	332-16 REMOVED		
H	508-37 ADDED		
G	WIRE MODEL NO ADDED		
F	ADDED DATA NO		
E	ADDED M2		
D	ADDED 508-1 QTY 3		
C	W3 MODEL 1B6000/1H		
B	ADD CIT 2		
A	R1 R2 R3 REMOVED		

(G) .01	1.7 LK-S2R/9290 H	205 LA-HV6000/1H	
(P)	1.7 LK-S2R/6000J		
240V. 2W.	1PH 60CY	120V. 2W.	1PH 60CY

11-18-68 CFM 6 P.T. W/B

WIRING & SCHEMATIC DIAGRAM
ENG-GEN CONTROL

610C313

610C314

WIRING DIAGRAM
INSIDE VIEW OF BOX TOP

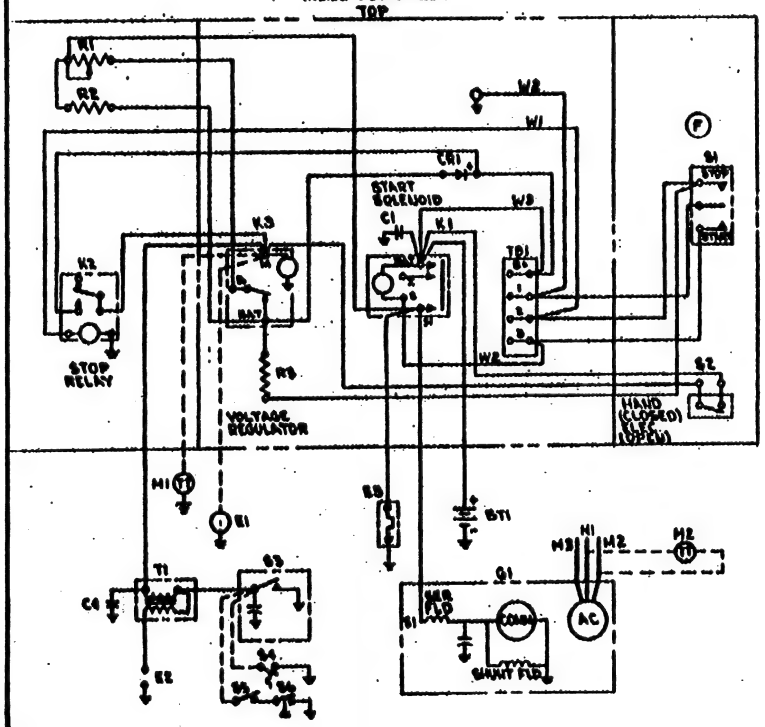

NOTE:
M2 IS GROUNDED AC LEAD
M1 & M3 HAVE .1 MFD CAPACITOR TO GROUND IN GENERATOR.

SCHEMATIC

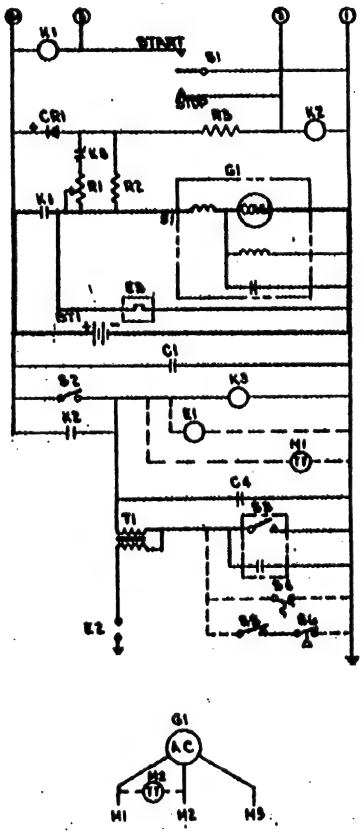

PARTS LIST

	REF. DES.	PART NO.	QTY.	DESCRIPTION
A	C1	312A185	1	CAPACITOR ASSY
		305A494	1	DIODE ASSY
	CR1	305B235(REF)	1	DIODE-REVERSE CURRENT
		305A254(REF)	1	HEAT SINK
	K1	307B845	1	RELAY-START SOLENOID
		307A1120	1	RELAY & LEAD ASSY-STOP
	K2	307D253(REF)	1	RELAY-STOP
	K3	305B303	1	RELAY-2 STEP VOLTAGE
		304A601	1	RESISTOR ASSY
	R1	304A175(REF)	1	RESISTOR-ADJ. 1 OHM, 50 W
	R2	304A344(REF)	1	RESISTOR-FIXED 1 OHM, 25 W
		308A294	1	SWITCH ASSY-RMT START
	S1	308P154(REF)	1	SWITCH-START/STOP
	R3	304A251(REF)	1	RESISTOR 30 OHM, 5 W
		308A300	1	SWITCH & LEAD ASSY
	S2	308P2 (REF)	1	SWITCH (HAND/ELECT START)
B	TB1	332A537	1	TERMINAL BLOCK
		332A500	1	MARKER STRIP
	W1	336A2024	1	LEAD ASSY 18"
	W2	330A1045	2	LEAD ASSY 8"
	W3	336A2023	1	LEAD ASSY 12"
		30103101	1	CONTROL BOX
		30103102	1	COVER
		98A2117	1	SILKSCREEN
		332-517	1	TERMINAL
D		508-1	3	GROMMET
		PARTS LIST (ENG-GEN)(REF)		
	BT1		1	BATTERY-12 VOLT
	C3	312A102	1	CAPACITOR 0.1 MFD
E	E1		1	FUEL PUMP OR FUEL SOL.
H	E2		1	SPARK PLUG
J	E3		1	CHOKE-ELEC
	G1		1	GENERATOR
	S3		1	BREAKER & CAP ASSEMBLY
*	S4	309A2	1	SWITCH-HIGH AIR TEMP
*	S5	308-97	1	SWITCH
*	S6	309A10	1	SWITCH-LOW OIL PRESS
	T1		1	IGNITION COIL (ONAN)
K				
*	M1		1	METER-RUNNING TIME, 12 VDC
*	M2		1	METER-RUNNING TIME, 120 VAC

* WHEN USED

610C314

NOTE:
UNLESS OTHERWISE NOTED, ALL COMPONENTS ARE SHOWN IN THE DE-ENERGIZED POSITION.

REV.	DESCRIPTION	BY	DATE
L	INDEX WAS 16		
K	ADDED M1 & M2		6-10-75
J	WAS E4		6-10-75
H	WAS E3		6-10-75
G	GENERAL REVISIONS		2-10-71
F	REV THE POINTS ON S1, TB1		3-22-70
F	REV THE POINTS ON S1, TB1		3-22-70
E	TE ADDED ON INL		
D	ADDED 508-1 REV A		
C	WAS 30-DEL - 310G000/1H		
B	TB1 WAS STRAIN/CAPS		
A	C2,C3 (REF) REMOVED		

Onan — DIVISION OF STUDEBAKER CORPORATION

205LK3RV6000/1H	11-13-68	CEM	C.F.T.	W.J.B.
120/240V., 1PH. 3W. 60CY	WIRING & SCHEMATIC DIAGRAM ENG-GEN CONTROL		
	610C314		

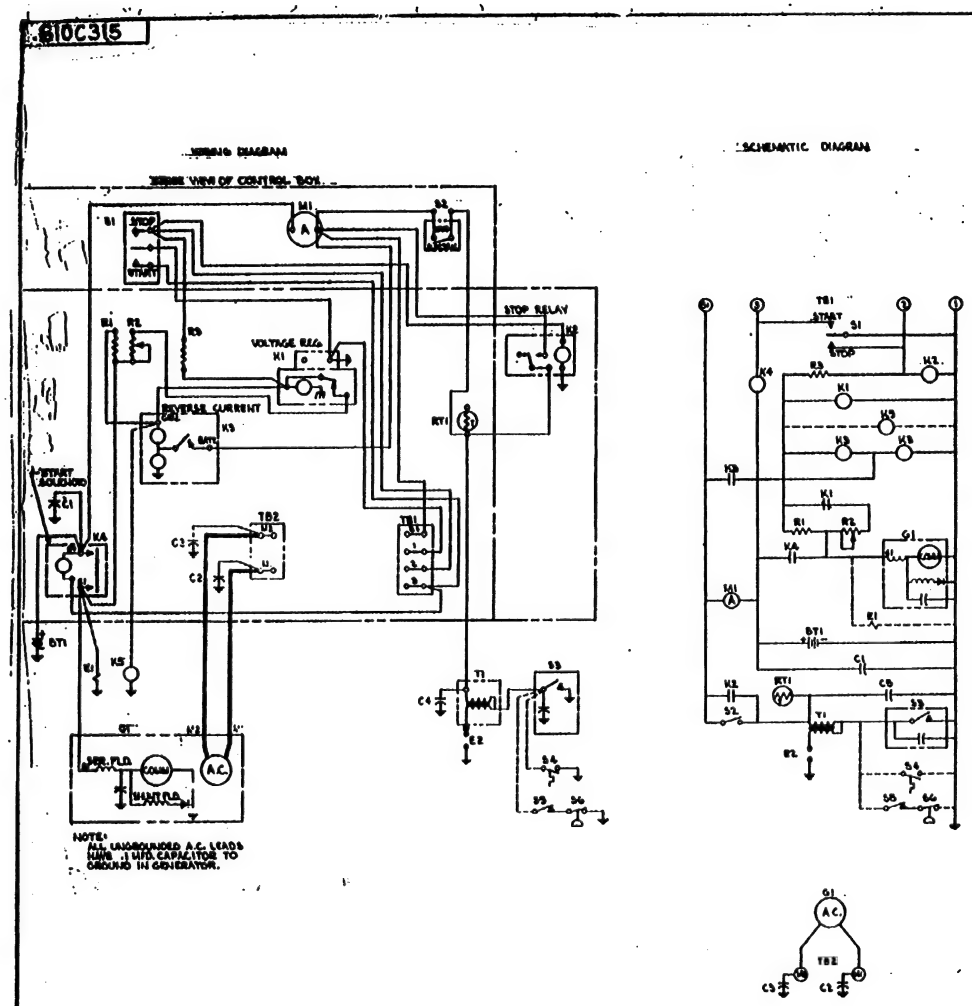

REF. NO.	PART NO.	QTY. USED	PART DESCRIPTION
C1	312A57	1	Capacitor, 1.0 MFD.
C2, 3	312A58	2	Capacitor, 0.1 MFD.
K1	305A1	1	Relay, 2-Step Voltage Reg.
K2	307B253	1	Relay, Stop
K3	307B180	1	Relay, Reverse Current
K4	307B1046	1	Relay, Start Solenoid
M1	302A58	1	Ammeter, Charge 10-0-10
R1	304A344	1	Resistor, 1-Ohm, 25 Watt
R2	304A175	1	Resistor, 1-Ohm, 50 Watt, Adj.
R3	304A251	1	Resistor, 30-Ohm, 5 Watt
RT1	304A60	1	Resistor, Hytemco 1.72-Ohm, 25 Watt
S1	308P154	1	Switch, Stop/Start
S2	308P2	1	Switch, Hand, Electric, Start
TB1	332A537	1	Terminal Block
	332A539	1	Marker Strip
TB2	332A231	1	Terminal Block
Ⓐ	301C1160	1	Control Box & Panel Assy.
	301B1198	1	Mounting Bracket
	301C1244	1	Cover
	301B1271	1	Endplate
BT1		1	Battery, 12-Volt
C4	312A35	1	Capacitor 0.1 MFD.
	312A162	1	Capacitor 0.1 MFD. (Spec J Models)
*E1		1	Electric Choke
E2		1	Spark Plug
G1		1	Generator
*K5	307P312	1	Fuel Solenoid
S3		1	Breaker & Cap Assembly
*S4	309A2	1	Switch, High Air Temp.
*S5	308-97	1	Switch
*S6	309A10	1	Switch, Low Oil Pressure
T1		1	Ignition Coil (ONAN)

* - When Used.

610C320

WIRING DIAGRAM

INSIDE VIEW OF BOX

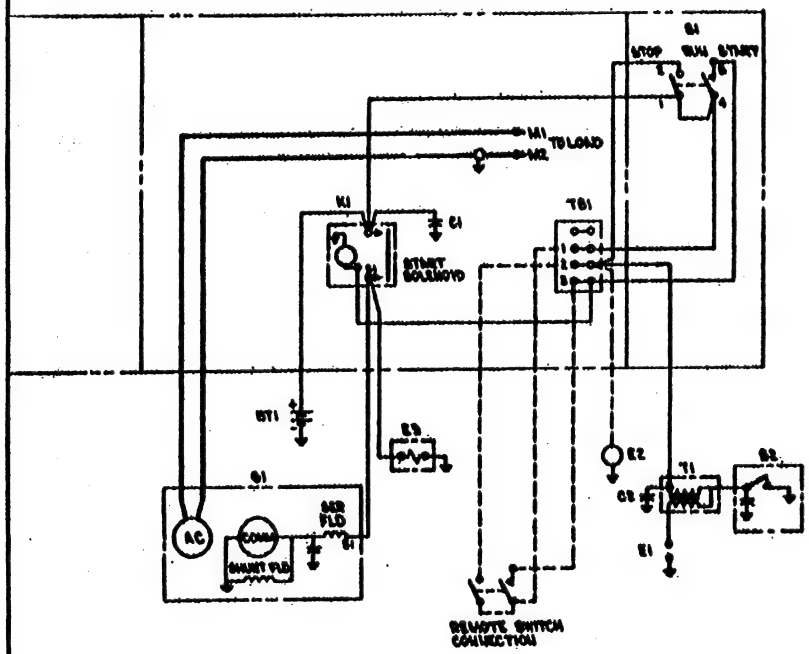

SCHEMATIC

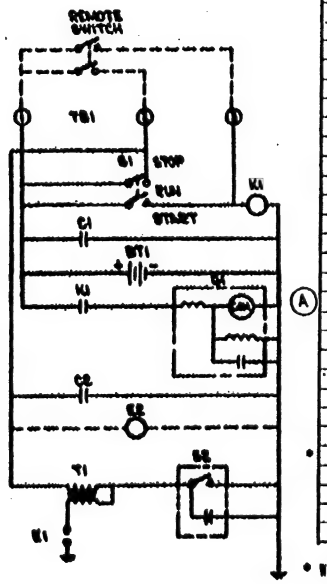

* WHEN USED

PARTS LIST

REF. DES.	PART NO.	QTY.	DESCRIPTION
C1	312A57	1	CAPACITOR - 1.0 MFD
K1	307B514	1	RELAY - START SOLENOID
S1	308A140	1	SWITCH, START-RUN-STOP
	00A2101	1	SILKSCREEN
TB1	332A537	1	TERMINAL BLOCK
	332A540	1	MARKER STRIP (BLANK OUT B+)
	332-142	1	TERMINAL
	301C3101	1	CONTROL BOX
	301B3102	1	COVER
	332-517	1	TERMINAL
	517-10	1	DOT BUTTON
	508-1	3	GROMMET
ENG-GEN PARTS LIST (REF)			
BT1		1	BATTERY 12 VOLT
C2		1	CAPACITOR 0.1 MFD
E1		1	SPARK PLUG
E2		1	FUEL PUMP
E3		1	ELEC CHOKE
G1		1	GENERATOR
S2		1	BREAKER & CAP. ASSY
T1		1	IGNITION COIL

NOTES:

M2 IS GROUNDED AC LEAD

M1 HAS .1 MFD CAPACITOR TO GROUND IN GEN

NOTE:
UNLESS OTHERWISE NOTED, ALL COMPONENTS ARE SHOWN IN THE DE-ENERGIZED POSITION.

A	ADDED "A" & "B" QTY.		
DRAWING NO. 808LK-1246000/7641H	6-19-69	CEM	JTM
120V., 1PH., 60CY 2W.,	WIRING DIAGRAM CONTROL-GEN SET		
	610C320		

610C338

WIRING DIAGRAM

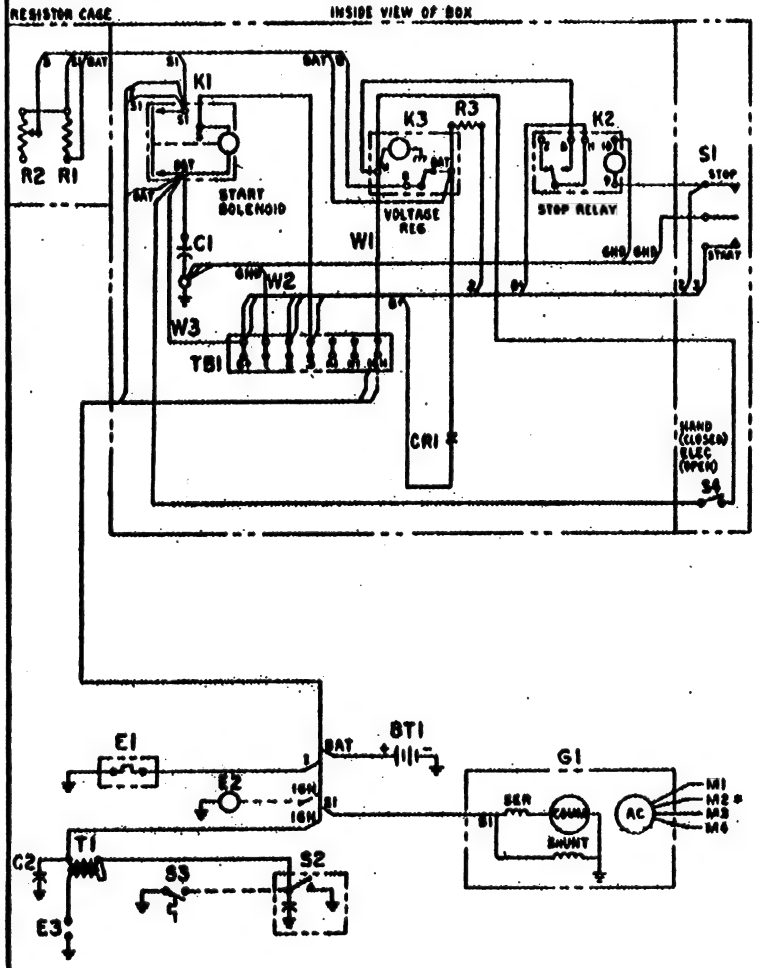

SCHEMATIC

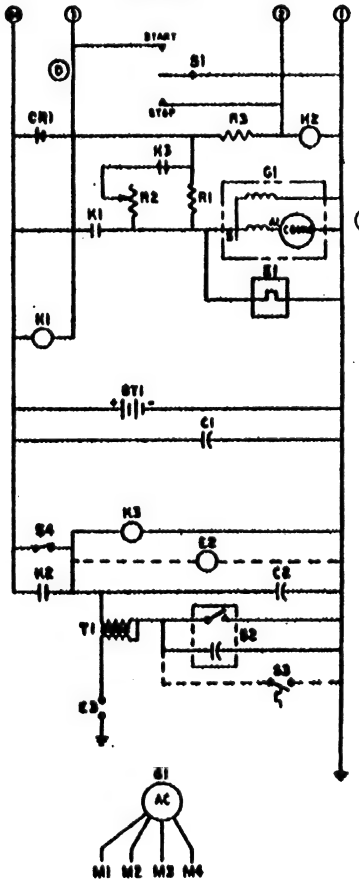

PARTS LIST

REF. DES.	PART NO.	QTY	DESCRIPTION
	312A185	1	CAPACITOR ASSY
C1	312A97(REF)	1	CAPACITOR, 1.0 MFD
CR1	305A235	1	DIODE-REVERSE CURRENT
	305A234	1	HEAT SINK
K1	307B1046	1	RELAY-START SOLENOID
	307A1145	1	RELAY & LEAD ASSY
K2	307B1052(REF)	1	RELAY-STOP
K3	305B383	1	RELAY-2 STEP VOLTAGE REGULATOR
	308A300	1	SWITCH & LEAD ASSY
S4	308P2 (REF)	1	SWITCH (HAND, ELECT START)
R1	304A344	1	RESISTOR, 1Ω, 25W
R2	304A175	1	RESISTOR 1Ω, 50W ADJ
	304A685	1	RESISTOR & LEAD ASSY
R3	304A251(REF)	1	RESISTOR, 30Ω, 5 W
	308A313	1	SWITCH ASSY-START, STOP
S1	308A154(REF)	1	SWITCH-START, STOP
TB1	332A745	1	BLOCK-TERMINAL
	332A1412	1	STRIP-MARKER
W1	336A1431	1	LEAD ASSY 6"
W2	336A2032	1	LEAD ASSY 3"
W3	336A2033	1	LEAD ASSY 6"
	301B3406	1	RESISTOR BOX
	301C3427	1	CONTROL BOX
	301B3405	1	COVER-CONTROL BOX
	331-88	2	GROMMET
	508-4	1	GROMMET
	98A1876	1	SILKSCREEN-RECONNECTION
	98A2322	1	SILKSCREEN-START, STOP
	98A1144	1	SILKSCREEN (HAND, ELECT START)
			610C338
PARTS LIST ENG GEN (REF)			
BTI		1	BATTERY, 12V
C2		1	CAPACITOR, 0.1 MFD
E1		1	CHOKE-ELECTRIC
* E2		1	PUMP-FUEL
E3		1	SPARK PLUG
G1		1	GENERATOR
S2		1	BREAKER & CAP ASSY
* S3		1	SWITCH-HIGH AIR TEMP
T1		1	COIL-IGNITION

*WHEN USED

PLACE SILKSCREEN ON INSIDE OF COVER
RECONNECTION FOR 3C

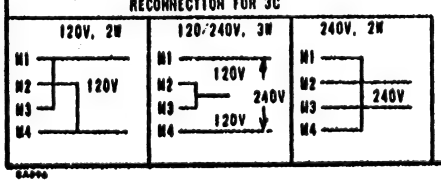

*GROUND AC LEAD, ALL OTHERS HAVE 0.1 MFD CAPACITOR TO GROUND.

K	WIRE 301E3406 CONT. BOX
D	REM K4 CONTACT IN SCHEM
C	ADDED 98A1144
B	ADDED 308A300 (K4)
A	

Onan

-01 2.5LK-3CR/108017

12V REMOTE

CONTROL - GEN SET (WIRING DIAGRAM)

610C338

610-0350 C

WIRING DIAGRAM

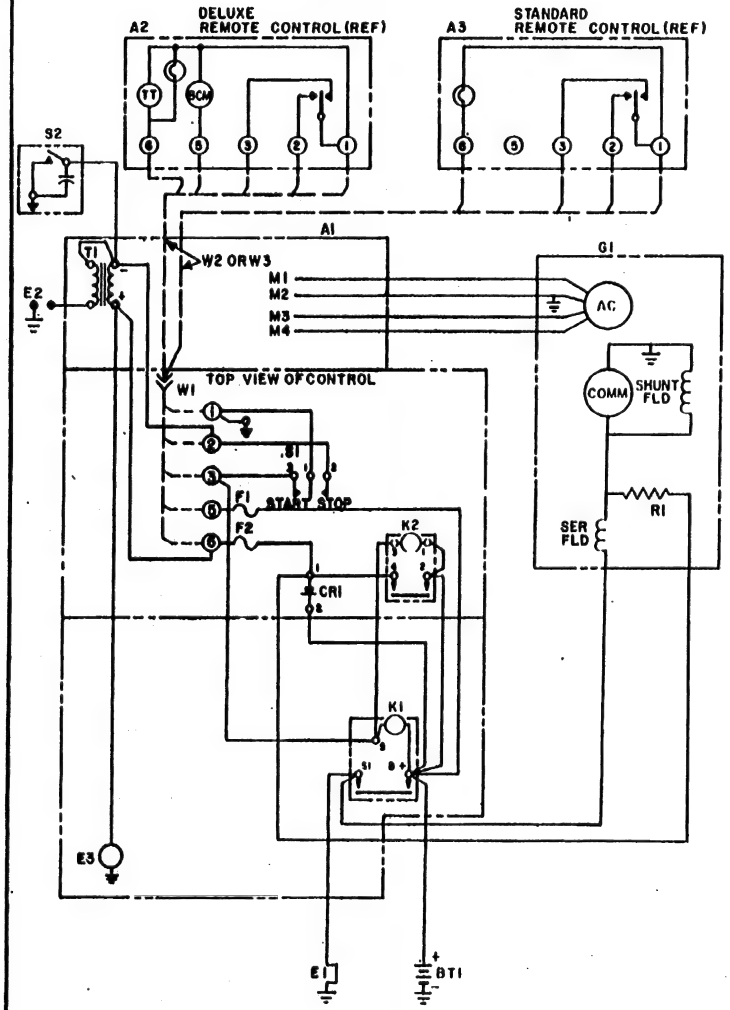

SCHEMATIC

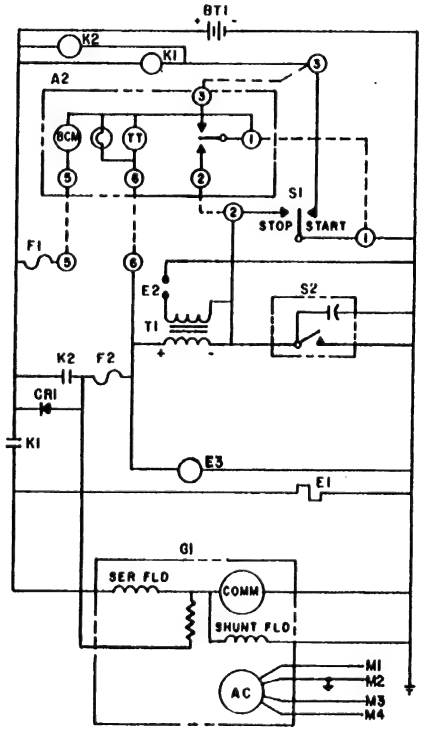

	REF. DES.	PART NO.	PART REV	QTY	DESCRIPTION
	A1	300-1233	D	1	CONTROL ASSY
	ALL PART NO'S LISTED BELOW ARE REF. ONLY				
	A2	300-0986	B	1	DELUXE REMOTE CONTROL
	A3	300-0985	B	1	STANDARD REMOTE CONTROL
	BT1			1	BATTERY 12V
	CR1	305-0235	A	1	RECTIFIER
	E1			1	CHOKE-ONAN
	E2			1	SPARK PLUG
	E3			1	SOLENOID-FUEL
	F1,2	321-0146	-	2	FUSE (10AMP, 32V)
	G1			1	GENERATOR
	K1	307-1498	B	1	SOLENOID-START
	K2	307-1497	B	1	RELAY-CRANK IGNITION
	R1	353-0062	-	1	RESISTOR
	S1			1	SWITCH-START-STOP
	S2			1	BREAKER & CAP ASSY
	T1			1	COIL-IGNITION
OPTION	W1	338-0958	B	1	WIRING HARNESS (CONN-REMOTE)
OPTION	W2	338-0959	C	1	WIRING HARNESS (CABLE-REMOTE CONTROL) (10 FEET LONG)
OPTION	W3	338-0960	C	1	WIRING HARNESS (CABLE-REMOTE CONTROL) (30 FEET LONG)
	610-0350	C			

RECONNECTION CHART

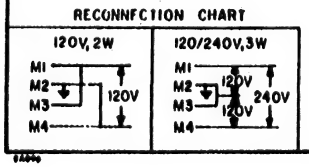

A	R1 WAS 304-0643 SUPSD DWG SAME NO. DATED 1-7-75 W/CHNG	WD	WN	3-8-76
LTR	REVISION	CKD	APPD	DATE

Onan — DIVISION OF ONAN CORPORATION, Minneapolis, Minnesota

-01	2.5 LK-3CR/IL	DATE 12-23-75	DR RKE	CHK WMN	CKD
		TITLE CONTROL-GEN SET (WIRING DIAGRAM)		
	120/240V. 1PH. 4W. 60Hz	SEPIA FROM 611-11	610-0350	DWG SIZE C

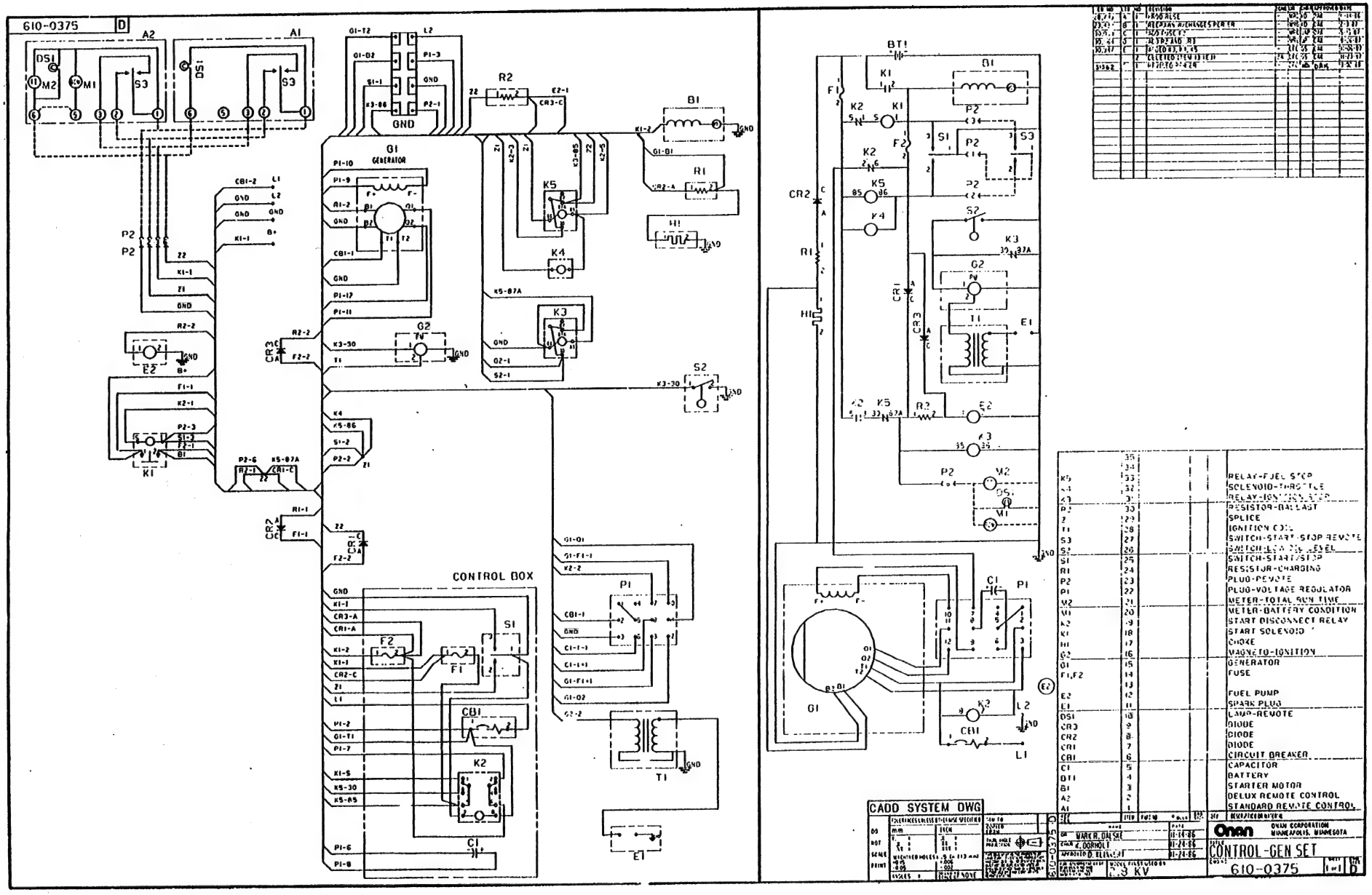
610-0375
D
A2
A1
DS1
M2
M1
S3
G1
GENERATOR
G2
R2
B1
R1
H1
K5
K4
K3
S2
E2
K1
CR3
CR2
CR1
F1
F2
CONTROL BOX
S1
CB1
K2
C1
P1
T1
E1
BT1
P2
GND
CADD SYSTEM DWG
RELAY-FUEL STOP
SOLENOID-THROTTLE
RESISTOR-BALLAST
SPLICE
IGNITION COIL
SWITCH-START-STOP REMOTE
SWITCH-START/STOP
RESISTOR-CHARGING
PLUG-REMOTE
PLUG-VOLTAGE REGULATOR
METER-TOTAL RUN TIME
METER-BATTERY CONDITION
START DISCONNECT RELAY
START SOLENOID
CHOKE
MAGNETO-IGNITION
GENERATOR
FUSE
FUEL PUMP
SPARK PLUG
LAMP-REMOTE
DIODE
DIODE
DIODE
CIRCUIT BREAKER
CAPACITOR
BATTERY
STARTER MOTOR
DELUX REMOTE CONTROL
STANDARD REMOTE CONTROL
Onan
ONAN CORPORATION
MINNEAPOLIS, MINNESOTA
CONTROL-GEN SET
610-0375
1 of 1
D

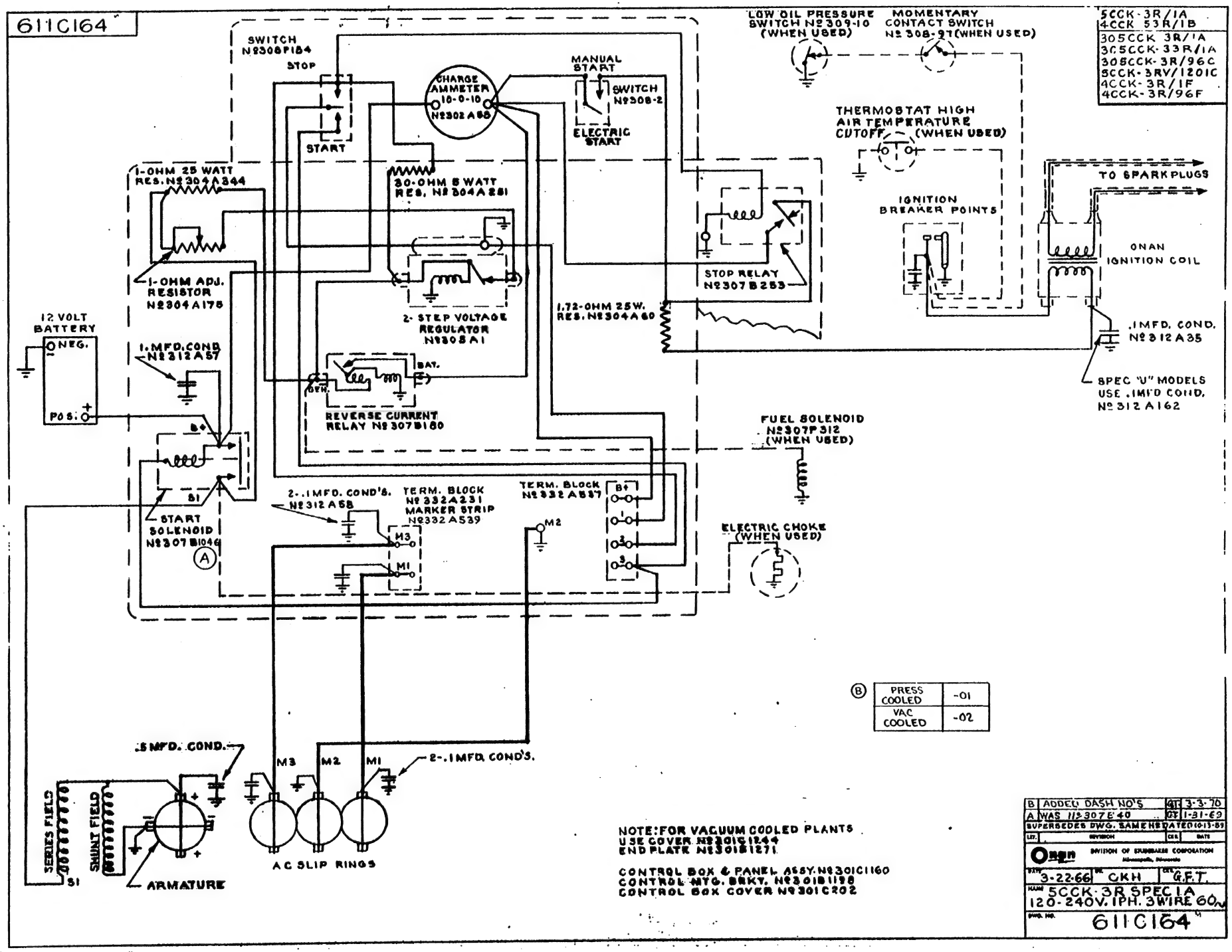
611C164
SWITCH Nº308P184
STOP
START
CHARGE AMMETER 10-0-10 Nº302A68
MANUAL START
SWITCH Nº308-2
ELECTRIC START
LOW OIL PRESSURE SWITCH Nº309-10 (WHEN USED)
MOMENTARY CONTACT SWITCH Nº308-97 (WHEN USED)
5CCK-3R/1A
4CCK 53R/1B
305CCK 3R/1A
305CCK-33R/1A
305CCK-3R/96C
5CCK-3RV/1201C
4CCK-3R/1F
4CCK-3R/96F
THERMOSTAT HIGH AIR TEMPERATURE CUTOFF (WHEN USED)
1-OHM 25 WATT RES. Nº304A344
30-OHM 5 WATT RES. Nº304A281
TO SPARK PLUGS
IGNITION BREAKER POINTS
ONAN IGNITION COIL
1-OHM ADJ. RESISTOR Nº304A175
2-STEP VOLTAGE REGULATOR Nº305A1
STOP RELAY Nº307B253
1.72-OHM 25W. RES. Nº304A60
.1MFD. COND. Nº312A35
12 VOLT BATTERY
NEG.
POS.
1.MFD. COND Nº312A57
BAT.
GEN.
REVERSE CURRENT RELAY Nº307B180
SPEC "U" MODELS USE .1MFD COND. Nº312A162
B+
S1
START SOLENOID Nº307B1046
A
FUEL SOLENOID Nº307P312 (WHEN USED)
2-.1MFD. COND'S. Nº312A58
TERM. BLOCK Nº332A231 MARKER STRIP Nº332A539
TERM. BLOCK Nº332A537
M3
M1
M2
ELECTRIC CHOKE (WHEN USED)
B
PRESS COOLED -01
VAC COOLED -02
.5MFD. COND.
2-.1MFD. COND'S.
SERIES FIELD
SHUNT FIELD
S1
ARMATURE
AC SLIP RINGS
NOTE: FOR VACUUM COOLED PLANTS
USE COVER Nº301C1244
END PLATE Nº301B1271
CONTROL BOX & PANEL ASSY. Nº301C1160
CONTROL MTG. BRKT. Nº301B1198
CONTROL BOX COVER Nº301C202
B ADDED DASH NO'S 3-3-70
A WAS 11-307E40 1-31-69
SUPERSEDES DWG. SAME HEDATED 10-13-69
Onan DIVISION OF STUDEBAKER CORPORATION Minneapolis, Minnesota
3-22-66 CKH G.F.T.
5CCK-3R SPEC 1A
120-240V. 1PH. 3WIRE 60~
611C164

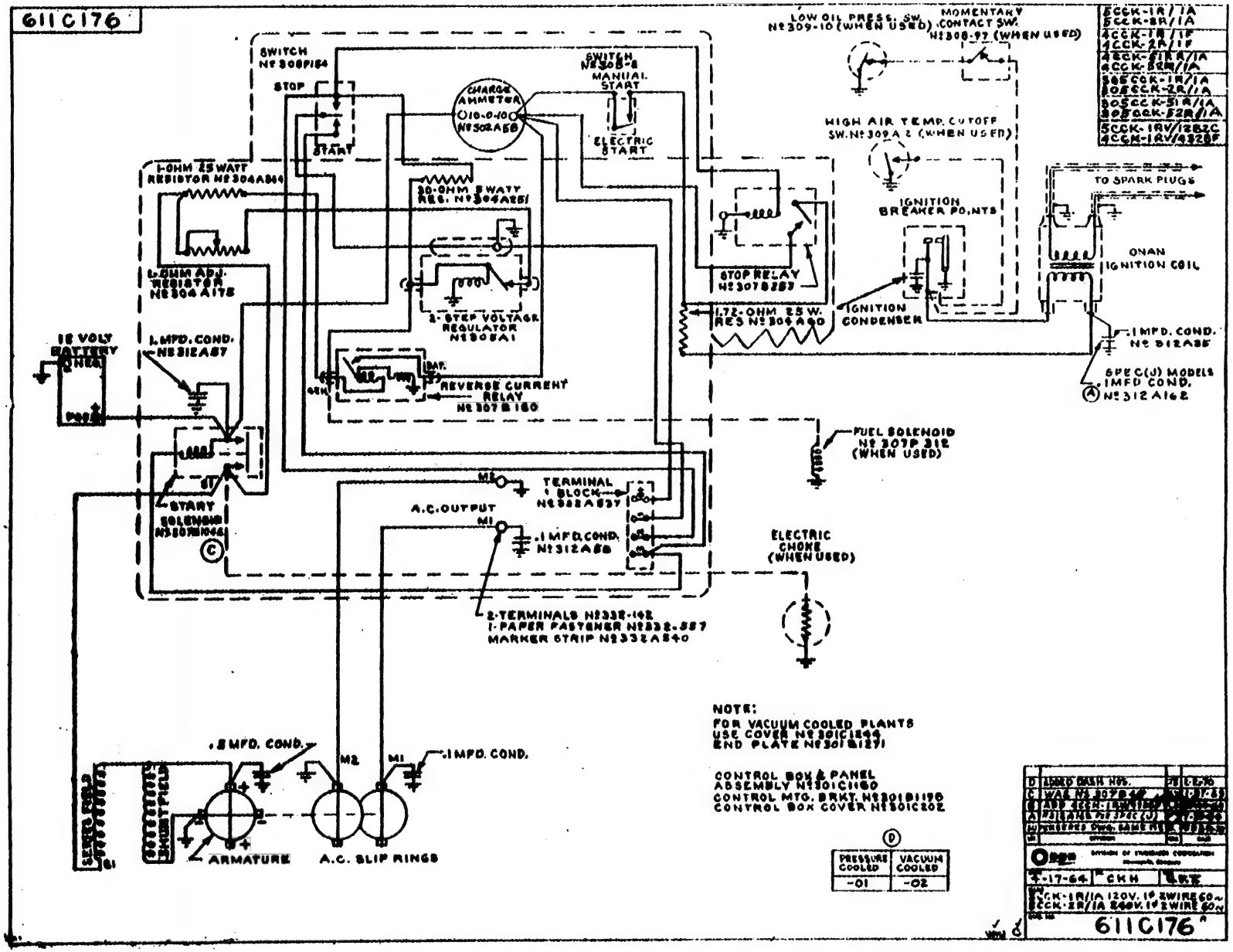
611C176
SWITCH Nº 308P164
STOP
START
CHARGE AMMETER
10-0-10
Nº 302A58
SWITCH Nº 308-8
MANUAL START
ELECTRIC START
1-OHM 25 WATT RESISTOR Nº 304A844
30-OHM 5 WATT RES. Nº 304A251
1-OHM ADJ. RESISTOR Nº 304A175
2-STEP VOLTAGE REGULATOR Nº 305A1
REVERSE CURRENT RELAY Nº 307B160
12 VOLT BATTERY
NEG.
POS.
1 MFD. COND. Nº 312A87
START SOLENOID Nº 307B1064
ST
BAT.
GEN.
A.C. OUTPUT
M2
M1
TERMINAL BLOCK Nº 332A537
.1 MFD. COND. Nº 312A58
2-TERMINALS Nº 332-192
1-PAPER FASTENER Nº 332-387
MARKER STRIP Nº 332A540
LOW OIL PRESS. SW. Nº 309-10 (WHEN USED)
MOMENTARY CONTACT SW. Nº 308-97 (WHEN USED)
HIGH AIR TEMP. CUTOFF SW. Nº 309A2 (WHEN USED)
IGNITION BREAKER POINTS
STOP RELAY Nº 307B283
1.72-OHM 25 W. RES Nº 304A90
IGNITION CONDENSER
TO SPARK PLUGS
ONAN IGNITION COIL
.1 MFD. COND. Nº 312A35
SPEC(J) MODELS .1 MFD COND. Nº 312A162
FUEL SOLENOID Nº 307P312 (WHEN USED)
ELECTRIC CHOKE (WHEN USED)
.5 MFD. COND.
.1 MFD. COND.
SERIES FIELD
SHUNT FIELD
ARMATURE
A.C. SLIP RINGS
NOTE:
FOR VACUUM COOLED PLANTS USE COVER Nº 301C1269 END PLATE Nº 301B1271
CONTROL BOX & PANEL ASSEMBLY Nº 301C1160
CONTROL MTG. BRKT. Nº 301B1190
CONTROL BOX COVER Nº 301C202
PRESSURE COOLED -01
VACUUM COOLED -02
5CCK-1R/1A
5CCK-2R/1A
4CCK-1R/1F
4CCK-2R/1F
4CCK-51R/1A
4CCK-52R/1A
305CCK-1R/1A
306CCK-2R/1A
305CCK-51R/1A
306CCK-52R/1A
5CCK-1RV/1282C
4CCK-1RV/4328F
D ISSUED CASH NOS.
C WAS Nº 307B649
B ADD 4CCK-1R/1F
A ADD ALL Nº SPEC (J)
REVISED DWG. NAME Nº
DATE
DRAWN
CHECKED
APPROVED
4-17-64
CKH
CCK-1R/1A 120V. 1Ø 2WIRE 60~
CCK-2R/1A 240V. 1Ø 2WIRE 60~
611C176

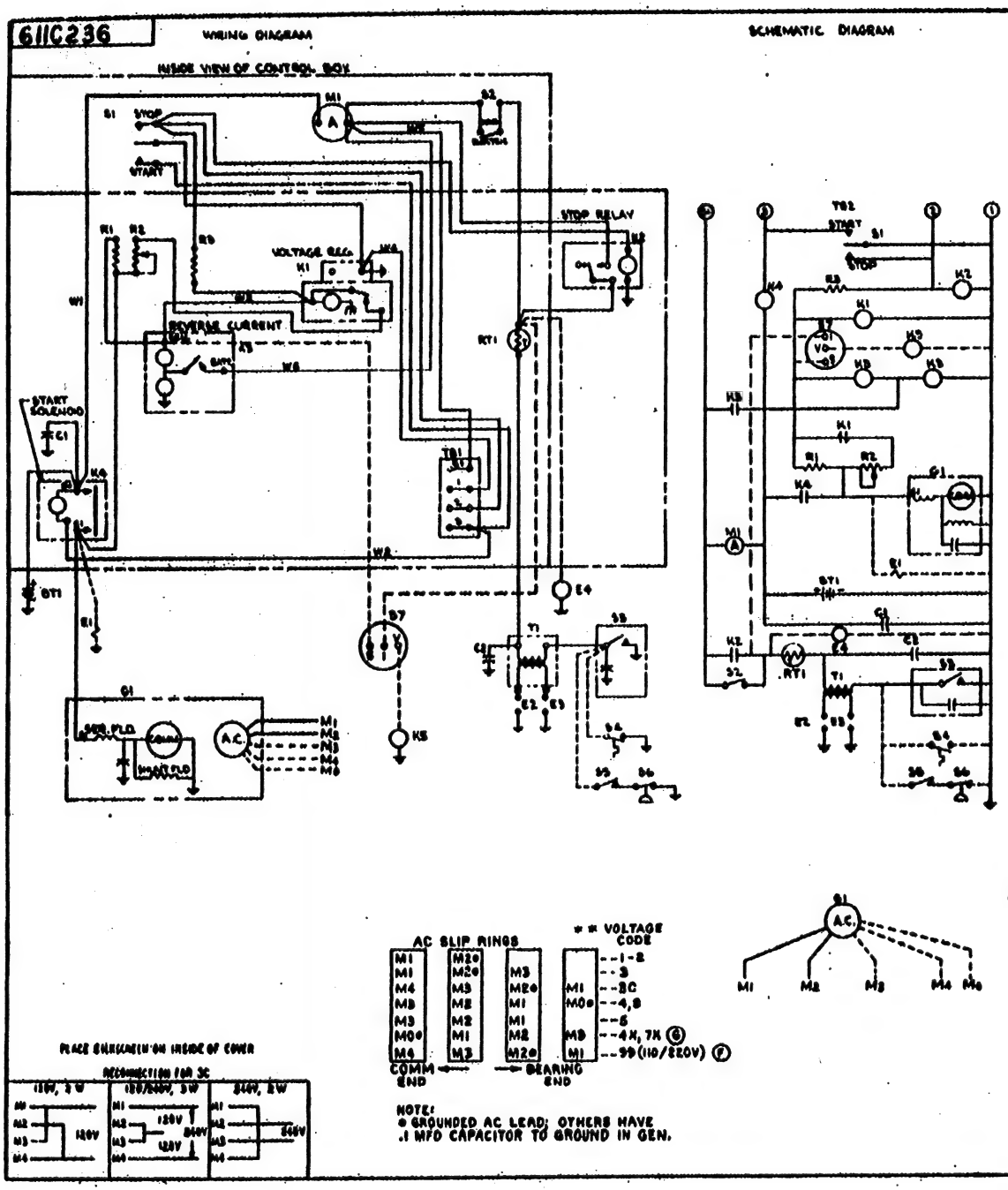

	REF. DES	PART NO.	QTY.	DESCRIPTION
				PARTS LIST
E	C1	312A185	1	CAPACITOR ASSY. 1.0 MFD
	K1	305A1	1	RELAY - 2 STEP VOLTAGE REG.
	K2	307A1115	1	RELAY & LEAD ASSY. - STOP
		3078253 (REF)	1	RELAY - STOP
	K3	307B180	1	RELAY - REVERSE CURRENT
	K4	307B1046	1	RELAY - START SOLENOID
	M1	302A58	1	AMMETER - CHARGE 10-0-10
		304B683	1	RESISTOR & LEAD ASSY
	R1	304A344 (REF)	1	RESISTOR, 1 Ω, 25W
	R2	304A175 (REF)	1	RESISTOR, 1 Ω, 50W
		308B292	1	SWITCH ASSY - RMT START
	S1	308P154 (REF)	1	SWITCH - STOP START
	R3	304A251 (REF)	1	RESISTOR, 30 Ω, 5#
		308B291	1	SWITCH & RESISTOR ASSY
	S2	308P2 (REF)	1	SWITCH - HAND ELEC START
	RT1	304A60 (REF)	1	RESISTOR, 1.72 Ω, 25W
	TB1	332A537	1	TERMINAL BLOCK
		332A566	1	MARKER STRIP
	W1	336A1432	1	LEAD ASSY
	W2	336A1263	1	LEAD ASSY
	W3	336A1430	1	LEAD ASSY
	W4	336A565	1	LEAD ASSY
	W5	336A1045	1	LEAD ASSY
	W6	336A1431	1	LEAD ASSY
		98A1076	1	SILK SCREEN
		301C1160	1	CONTROL BOX & PANEL ASSY
		301B1138	1	MTG BRACKET
		301C202	1	COVER (PRESS COOLED)
		301C1244	1	COVER (VACUUM COOLED)
		301B1271	1	ENOPLATE (VACUUM COOLED)
		98A1012	1	SILK SCREEN
		98A1144	1	SILK SCREEN
				PARTS LIST (ENG-GEN) 611C236
	BT1		1	BATTERY 12 VOLT
A	C2	312A35 (REF)	1	CAPACITOR 0.1 MFD
B		312A102 (REF)	1	CAPACITOR 0.1 MFD (SPEC. 1 MODELS)
	E1		1	ELECTRIC CHOKE
	E2,3		2	SPARK PLUGS
	G1		1	GENERATOR
*	K5	307P312 (REF)	1	FUEL SOLENOID
	S3		1	BREAKER & CAP ASSY
*	S4	309A2 (REF)	1	SWITCH - HIGH AIR TEMP.
*	S5	309-87 (REF)	1	SWITCH
*	S6	309A19 (REF)	1	SWITCH - LOW OIL PRESS.
	T1		1	IGNITION COIL - (MAN)
C	S7	148B367 (REF)	1	SWITCH-VACUUM (FUEL SOLENOID)
D *	E4		1	FUEL PUMP

* WHEN USED

PRESS COOLED	-01
VAC COOLED	-02

4.0/6.0CK-00R/13	6-8-70 CIP EPF
50/60Hz	CONTROL-GEN SET (WIRING DIAGRAM)
	611C236

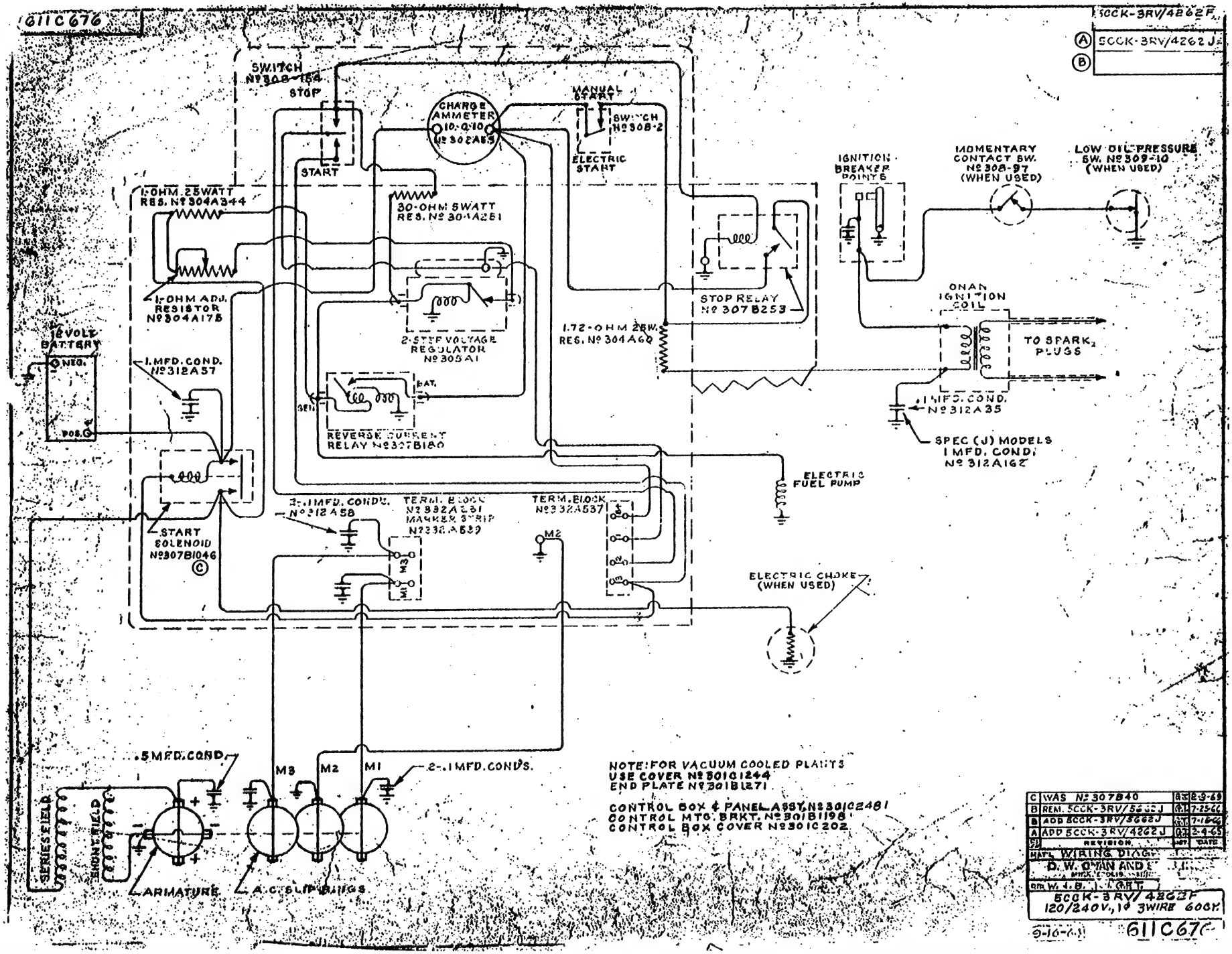
611C676
5CCK-3RV/4262F
A 5CCK-3RV/4262J
B
SWITCH Nº308-154
STOP
START
CHARGE AMMETER 10-0-10 Nº302A85
MANUAL START
SWITCH Nº308-2
ELECTRIC START
1-OHM .25WATT RES. Nº304A344
30-OHM 5WATT RES. Nº304A281
1-OHM ADJ. RESISTOR Nº304A178
12VOLT BATTERY
NEG.
POS.
1.MFD. COND. Nº312A57
2-STEP VOLTAGE REGULATOR Nº305A1
REVERSE CURRENT RELAY Nº307B180
GEN.
BAT.
START SOLENOID Nº307B1046
C
2-.1MFD. CONDS. Nº312A58
TERM. BLOCK Nº332A531
MARKER STRIP Nº332A539
TERM. BLOCK Nº332A537
M2
1.72-OHM 25W. RES. Nº304A60
STOP RELAY Nº307B253
IGNITION BREAKER POINTS
MOMENTARY CONTACT SW. Nº308-97 (WHEN USED)
LOW OIL PRESSURE SW. Nº309-10 (WHEN USED)
ONAN IGNITION COIL
TO SPARK PLUGS
.1MFD. COND. Nº312A35
SPEC (J) MODELS 1 MFD. COND. Nº312A162
ELECTRIC FUEL PUMP
ELECTRIC CHOKE (WHEN USED)
.5MFD. COND.
M3
M2
M1
2-.1MFD. CONDS.
SERIES FIELD
SHUNT FIELD
ARMATURE
A.C. SLIP RINGS
NOTE: FOR VACUUM COOLED PLANTS
USE COVER Nº301C1244
END PLATE Nº301B1271
CONTROL BOX & PANEL ASSY. Nº301C2481
CONTROL MTG. BRKT. Nº301B1198
CONTROL BOX COVER Nº301C202
C WAS Nº307B40 B.S. 2-3-69
B REM. 5CCK-3RV/5262J G.H. 7-25-66
B ADD 5CCK-3RV/5662J G.H. 7-18-66
A ADD 5CCK-3RV/4262J G.H. 2-4-65
REVISION BY DATE
MAT'L WIRING DIAG.
D. W. ONAN AND S
MINN. MINNEAPOLIS
DRN. W. J. B. J. G. H.
5CCK-3RV/4262F
120/240V., 1Ø 3WIRE 60CY.
9-16-61
611C676

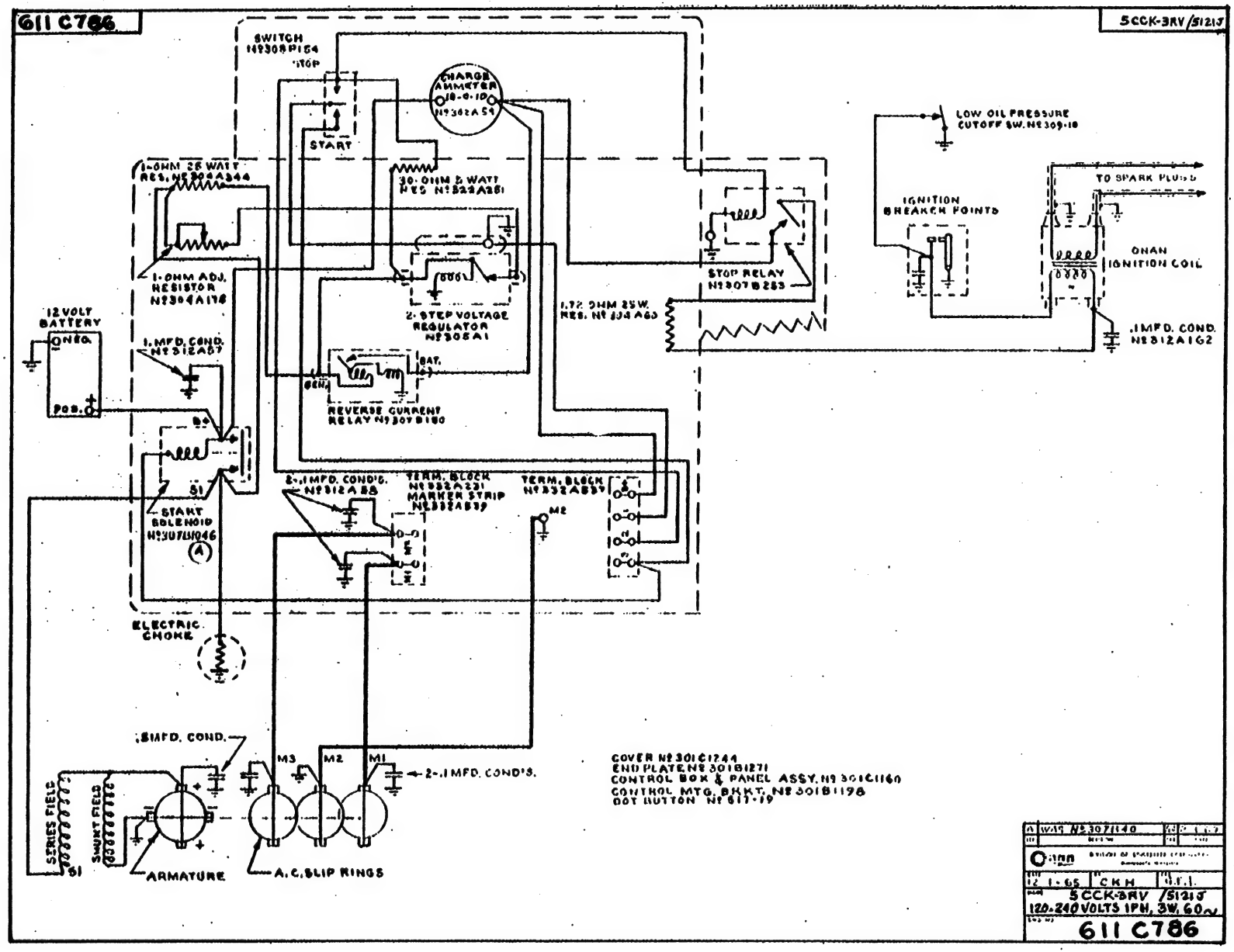
611 C786
5CCK-3RV/51213
SWITCH
STOP
START
CHARGE AMMETER
10-0-10
1-OHM 25 WATT RES.
30-OHM 5 WATT RES.
1-OHM ADJ. RESISTOR
2-STEP VOLTAGE REGULATOR
STOP RELAY
LOW OIL PRESSURE CUTOFF SW.
IGNITION BREAKER POINTS
TO SPARK PLUGS
ONAN IGNITION COIL
.1 MFD. COND.
12 VOLT BATTERY
NEG.
POS.
1 MFD. COND.
1.72 OHM 25 W. RES.
BAT.
GEN.
REVERSE CURRENT RELAY
B+
S1
START SOLENOID
2-.1 MFD. COND'S.
TERM. BLOCK
MARKER STRIP
M2
ELECTRIC CHOKE
.5 MFD. COND.
M3
M1
2-.1 MFD. COND'S.
SERIES FIELD
SHUNT FIELD
ARMATURE
A.C. SLIP RINGS
COVER
END PLATE
CONTROL BOX & PANEL ASSY.
CONTROL MTG. BRKT.
DOT BUTTON
5CCK-3RV /51213
120-240 VOLTS 1PH, 3W, 60~
611 C786

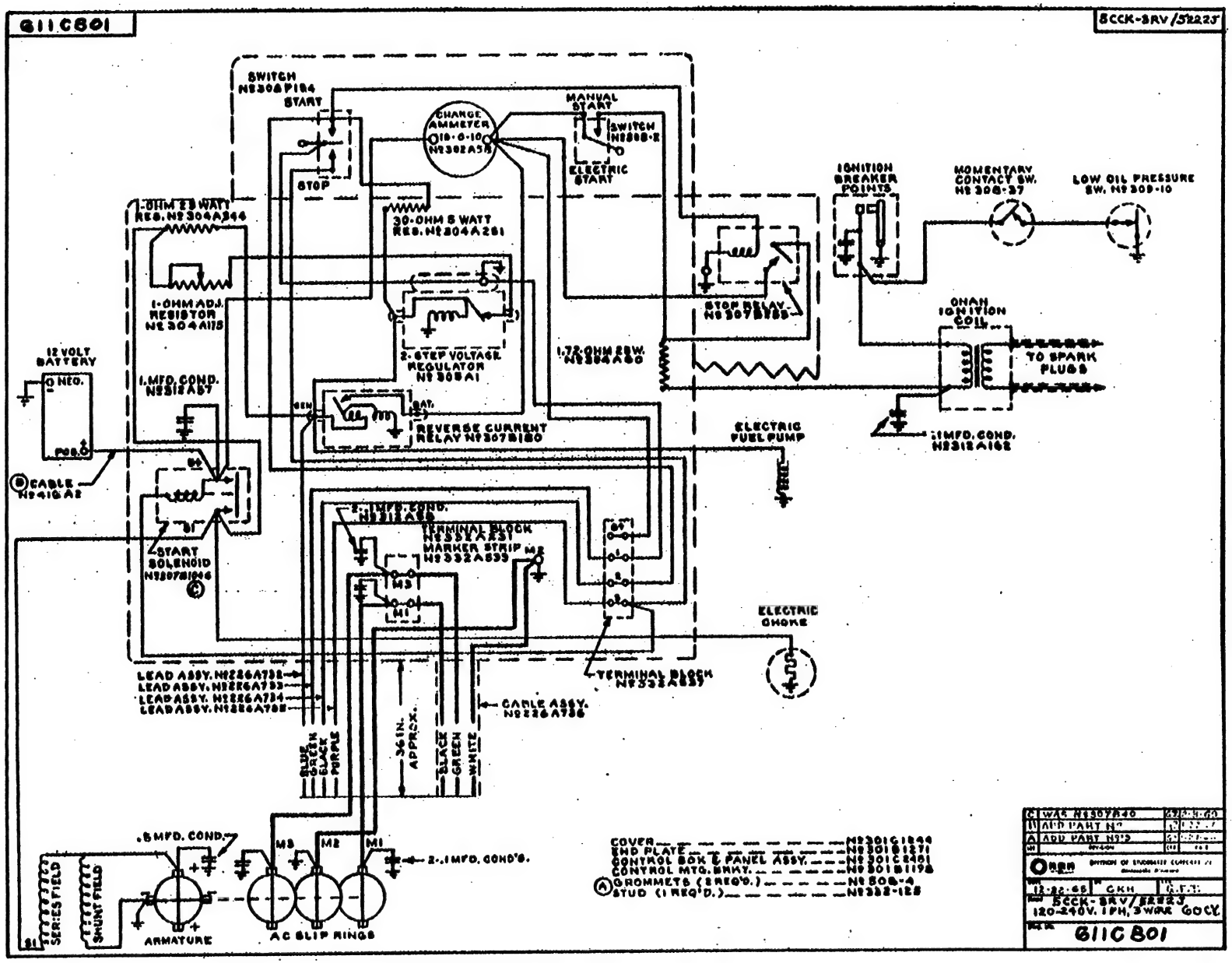
611C801
5CCK-3RV/52223
SWITCH
START
STOP
CHARGE AMMETER
MANUAL START
SWITCH
ELECTRIC START
IGNITION BREAKER POINTS
MOMENTARY CONTACT SW.
LOW OIL PRESSURE SW.
1-OHM 25 WATT RES.
30-OHM 5 WATT RES.
1-OHM ADJ. RESISTOR
2-STEP VOLTAGE REGULATOR
STOP RELAY
ONAN IGNITION COIL
TO SPARK PLUGS
12 VOLT BATTERY
NEG.
POS.
1 MFD. COND.
1.72 OHM 25W.
REVERSE CURRENT RELAY
ELECTRIC FUEL PUMP
.1 MFD. COND.
CABLE
START SOLENOID
2-.1 MFD. COND.
TERMINAL BLOCK
MARKER STRIP
ELECTRIC CHOKE
LEAD ASSY.
TERMINAL BLOCK
CABLE ASSY.
BLUE
BROWN
BLACK
PURPLE
36 IN. APPROX.
BLACK
GREEN
WHITE
.5 MFD. COND.
2-.1 MFD. COND'S.
SERIES FIELD
SHUNT FIELD
ARMATURE
AC SLIP RINGS
COVER
END PLATE
CONTROL BOX & PANEL ASSY.
CONTROL MTG. BRKT.
GROMMETS (2 REQ'D.)
STUD (1 REQ'D.)
5CCK-3RV/52223
120-240V. 1PH, 3WIRE 60CY.
611C801

611C839

WIRING DIAGRAM

INSIDE VIEW OF CONTROL BOX

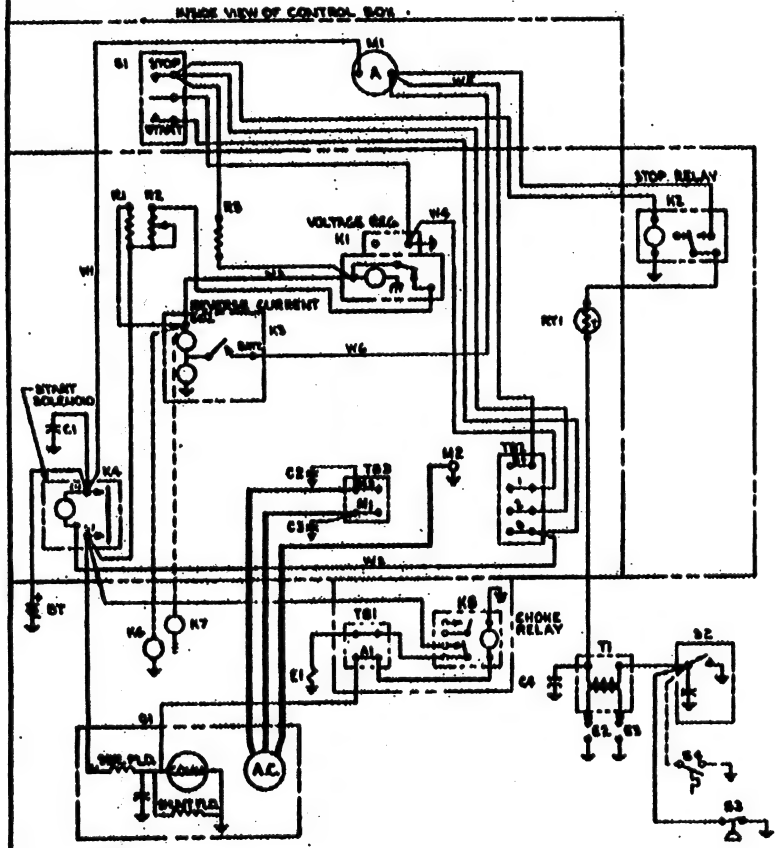

SCHEMATIC DIAGRAM

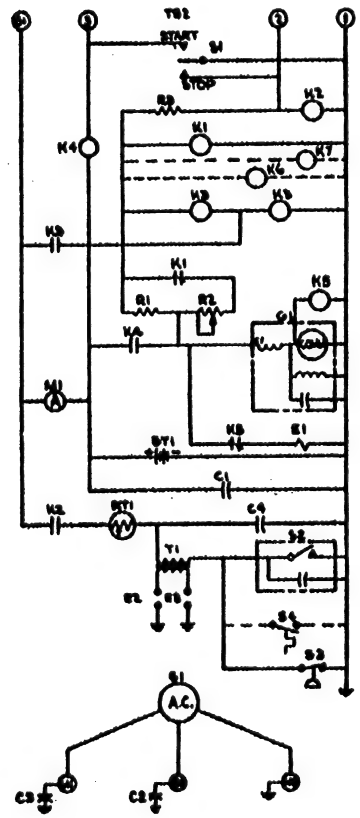

REF. DES.	PART NO.	QTY	DESCRIPTION
C1	312A186	1	CAPACITOR ASSY 1.0 MFD
C2,3	312A66	1	CAPACITOR ASSY 0.1 MFD
K1	305A1	1	RELAY-2 STEP VOLTAGE REGTR
	307A1175	1	RELAY & LEAD ASSY
K2	307B253(REF)	1	RELAY-STOP
K3	307B180	1	RELAY-REVERSE
K4	307B1046	1	RELAY-START SOLENOID
	307A1138	1	RELAY & BOX ASSY
K5	307B642(REF)	1	RELAY-CHOKE
T81	332A609(REF)	1	TERMINAL BLOCK
	301B2722(REF)	1	RELAY & TERM BOX
M1	302A58	1	AMMETER-CHARGE 10-0-10
	304B683	1	RESISTORS & LEAD ASSY
R1	304A344(REF)	1	RESISTOR-1 OHM 25 W
R2	304A175(REF)	1	RESISTOR-1 OHM, 50 W ADJ
	304A700	1	RESISTOR & LEAD ASSY
RT1	304A60(REF)	1	RESISTOR-HYTEMCO 1.72 OHM, 25 W
	308B292	1	SWITCH ASSY-RWT START
S1	308P154(REF)	1	SWITCH-STOP-START
R3	304A251(REF)	1	RESISTOR-30 OHM, 5 W
T82	332A537	1	TERMINAL BLOCK
	332A539	1	MARKER STRIP
	332-142	1	TERMINAL
T83	332A231	1	TERMINAL BLOCK
	301C2723	1	CONTROL BOX & PANEL ASSY
	301B1198	1	BRACKET-CONTROL BOX MTG
	301C1244	1	COVER-
	301B1271	1	ENDPLATE
	98A1812	1	SILKSCREEN
	517-19	1	BUTTON-DOT
W1	336A1432	1	LEAD ASSY
W2	336A1263	1	LEAD ASSY
W3	336A1430	1	LEAD ASSY
W4	336A565	1	LEAD ASSY
W5	336A1045	1	LEAD ASSY
W6	336A1431	1	LEAD ASSY
	PARTS LIST (ENG GEN)		
BT1		1	BATTERY-12V
C4	312A162(REF)	1	CAPACITOR, 0.1 MFD.(SPEC 1)
E1		1	CHOKE-SISSON
E2,3		2	SPARK PLUG
G1		1	GENERATOR
* K6	149P650(REF)	1	PUMP-FUEL
S2		1	BREAKER & CAP ASSY
* K7		1	SOLENOID-GAS
* S4	309A2(REF)	1	SWITCH-HIGH AIR TEMP
S3	309A10(REF)	1	SWITCH-LOW OIL PRESS
T1		1	COIL-IGN(OHAN)

611C839

* WHEN USED

DASH NO.
-01

4CCK-3RV/9360J	
5CCK-3RV6000/1J	
6CCK-3RV6000/1J	
8CCK-3RV/9360J	
120/240 V, 1 PH, 3 W, 60 CY.	

SUPER SUB BASE NO. DATED 1-17-66

Onan DIVISION OF ONAN CORPORATION

DATE 2-8-71 BY CDR SCALE

WIRING & SCHEMATIC DIAGRAM, ENG-GEN. CONTROL

DWG NO. 611C914 DWG NO. 611C839

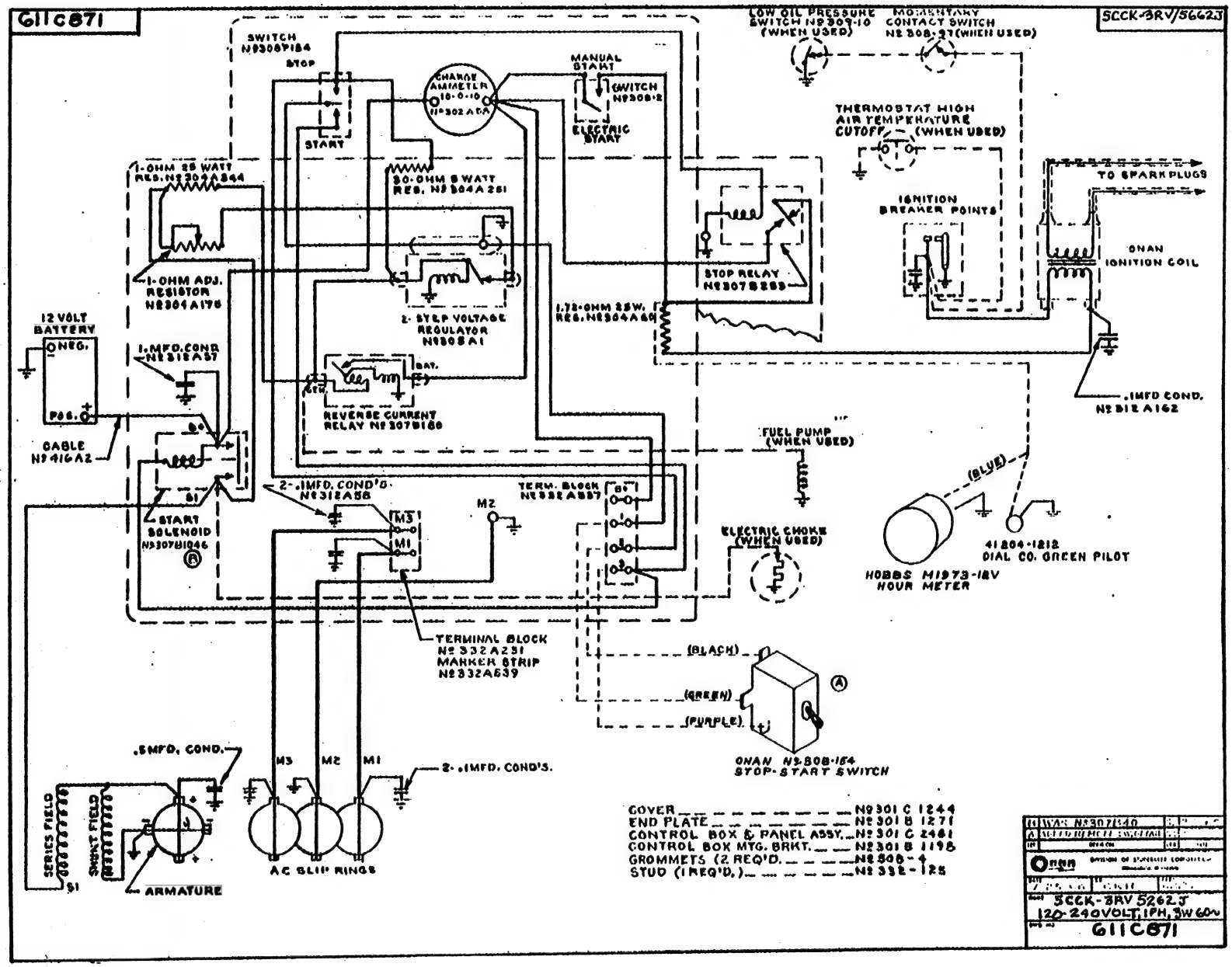
611C871
5CCK-3RV/5662J
SWITCH Nº 308P184
STOP
START
CHARGE AMMETER 10-0-10 Nº 302 A 6A
MANUAL START
SWITCH Nº 308-2
ELECTRIC START
LOW OIL PRESSURE SWITCH Nº 309-10 (WHEN USED)
MOMENTARY CONTACT SWITCH Nº 308-27 (WHEN USED)
THERMOSTAT HIGH AIR TEMPERATURE CUTOFF (WHEN USED)
IGNITION BREAKER POINTS
TO SPARK PLUGS
ONAN IGNITION COIL
1-OHM 25 WATT RES. Nº 302 A 344
30-OHM 5 WATT RES. Nº 304 A 251
1-OHM ADJ. RESISTOR Nº 304 A 176
2-STEP VOLTAGE REGULATOR Nº 308 A 1
STOP RELAY Nº 307 B 283
1.72-OHM 25W. RES. Nº 304 A 60
12 VOLT BATTERY
NEG.
POS.
1-MFD. COND. Nº 312 A 57
REVERSE CURRENT RELAY Nº 307 B 180
.1MFD COND. Nº 312 A 162
CABLE Nº 416 A 2
FUEL PUMP (WHEN USED)
2-.1MFD. COND'S. Nº 312 A 56
TERM. BLOCK Nº 332 A 557
START SOLENOID Nº 307 B 1046
M3
M1
M2
ELECTRIC CHOKE (WHEN USED)
(BLUE)
HOBBS M1973-12V HOUR METER
41 204-1212 DIAL CO. GREEN PILOT
TERMINAL BLOCK Nº 332 A 231 MARKER STRIP Nº 332 A 639
(BLACK)
(GREEN)
(PURPLE)
ONAN Nº 308-154 STOP-START SWITCH
.5MFD. COND.
SERIES FIELD
SHUNT FIELD
S1
ARMATURE
AC SLIP RINGS
2-.1MFD. COND'S.
COVER Nº 301 C 1244
END PLATE Nº 301 B 1271
CONTROL BOX & PANEL ASSY. Nº 301 C 2481
CONTROL BOX MTG. BRKT. Nº 301 B 1198
GROMMETS (2 REQ'D.) Nº 508-4
STUD (1 REQ'D.) Nº 332-125
WAS Nº 307 B 40
ONAN
5CCK-3RV 5262J
120-240 VOLT, 1PH, 3W 60~
611C871

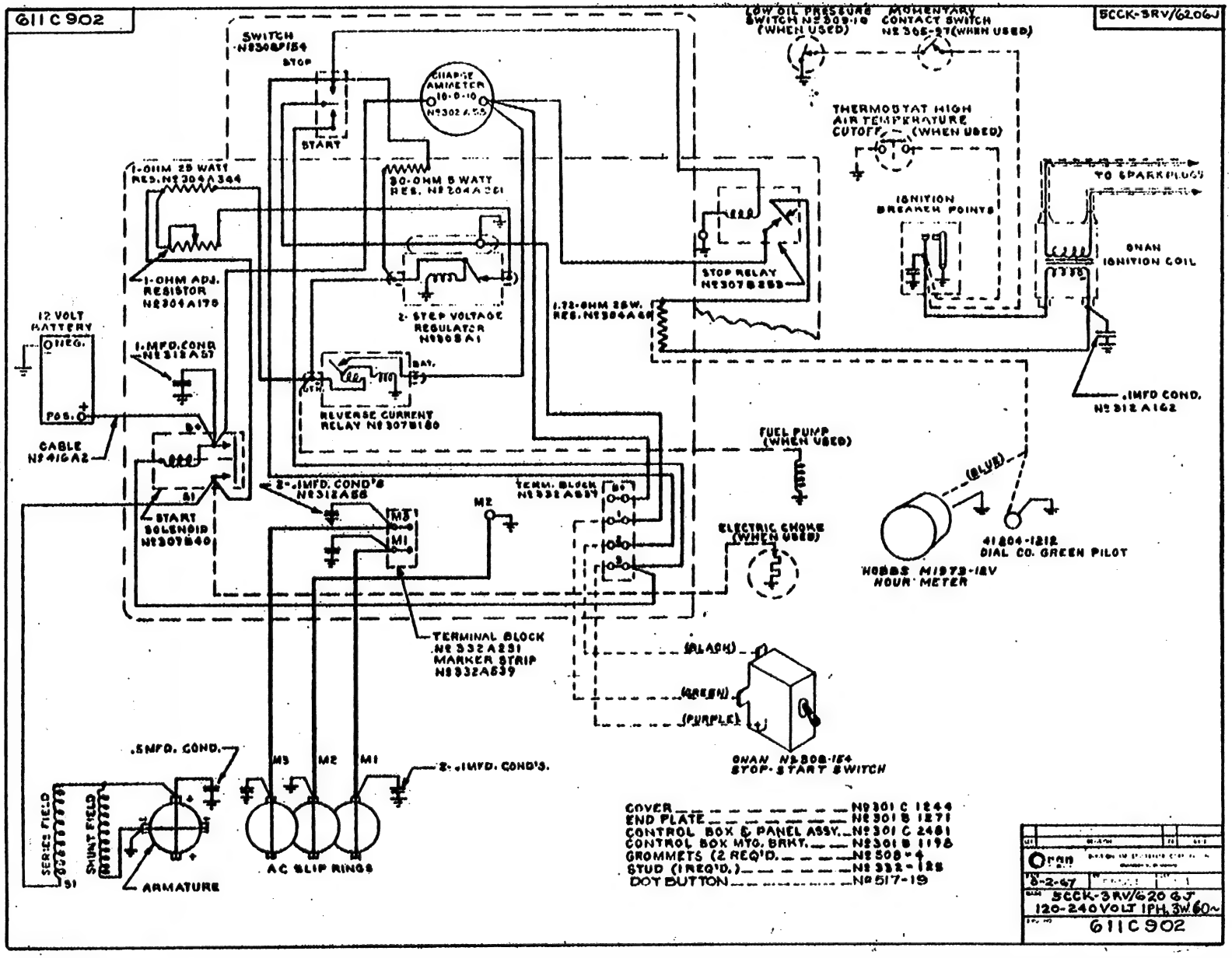
611C902
5CCK-3RV/6206J
SWITCH Nº308P154
STOP
START
CHARGE AMMETER 10-0-10 Nº302A55
1-OHM 25 WATT RES. Nº304A344
30-OHM 5 WATT RES. Nº304A261
1-OHM ADJ. RESISTOR Nº304A170
2-STEP VOLTAGE REGULATOR Nº308A1
REVERSE CURRENT RELAY Nº307B180
12 VOLT BATTERY
NEG.
POS.
1-MFD. COND Nº312A57
CABLE Nº416A2
START SOLENOID Nº307B40
2-.1MFD. COND'S Nº312A58
M3
M1
M2
TERM. BLOCK Nº332A537
TERMINAL BLOCK Nº332A251
MARKER STRIP Nº332A539
1.72-OHM 25W. RES. Nº304A69
STOP RELAY Nº307B253
LOW OIL PRESSURE SWITCH Nº309-19 (WHEN USED)
MOMENTARY CONTACT SWITCH Nº305-27 (WHEN USED)
THERMOSTAT HIGH AIR TEMPERATURE CUTOFF (WHEN USED)
IGNITION BREAKER POINTS
TO SPARK PLUGS
ONAN IGNITION COIL
.1MFD COND. Nº312A162
FUEL PUMP (WHEN USED)
ELECTRIC CHOKE (WHEN USED)
(BLUE)
HOBBS M1973-12V HOUR METER
41204-1212 DIAL CO. GREEN PILOT
(BLACK)
(GREEN)
(PURPLE)
ONAN Nº308-154 STOP-START SWITCH
.5MFD. COND.
2-.1MFD. COND'S.
SERIES FIELD
SHUNT FIELD
S1
ARMATURE
AC SLIP RINGS
COVER Nº301C1244
END PLATE Nº301B1271
CONTROL BOX & PANEL ASSY. Nº301C2481
CONTROL BOX MTG. BRKT. Nº301B1198
GROMMETS (2 REQ'D.) Nº508-4
STUD (1 REQ'D.) Nº332-125
DOT BUTTON Nº517-19
Onan
8-2-47
5CCK-3RV/620 GJ
120-240 VOLT 1PH. 3W 60~
611C902

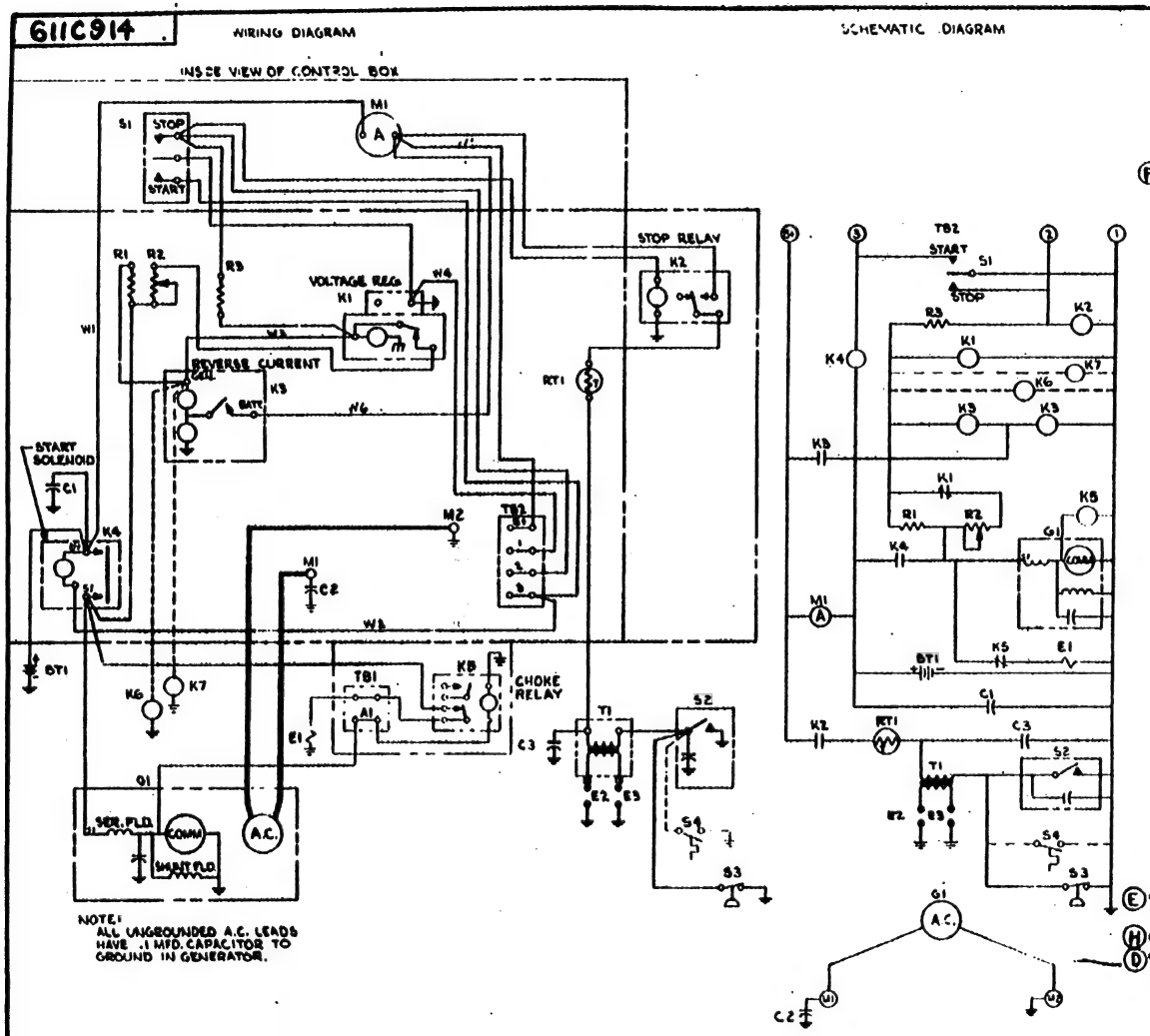

REF DES	PART NO	QTY	DESCRIPTION
C1	312A186	1	CAPACITOR ASSY 1.0 MFD
C2	312A66	1	CAPACITOR ASSY 0.1 MFD
K1	305A1	1	RELAY-2 STEP VOLTAGE RGLTR
	307A1115	1	RELAY & LEAD ASSY
K2	307B253(REF)	1	RELAY-STOP
K3	307B180	1	RELAY-REVERSE CURRENT
K4	307B1046	1	RELAY-START SOLENOID
	307A1138	1	RELAY & BOX ASSY
K5	307B642(REF)	1	RELAY-CHOKE
TB1	332A609(REF)	1	TERMINAL BLOCK
	301B2722(REF)	1	RELAY & TERM BOX
M1	302A58	1	AMMETER-CHARGE 10-0-10
	304B683	1	RESISTORS & LEAD ASSY
R1	304A344(REF)	1	RESISTOR-1 OHM, 25 W
R2	304A175(REF)	1	RESISTOR-1 OHM, 50 W ADJ
	304A700	1	RESISTOR & LEAD ASSY
RT1	304A60(REF)	1	RESISTOR-HYTEMCO 1.72 OHM, 25 W
	308B292	1	SWITCH ASSY-RMT START
S1	308P154(REF)	1	SWITCH-STOP/START
R3	304A251(REF)	1	RESISTOR-30 OHM, 5 W
TB2	332A537	1	TERMINAL BLOCK
	332A540	1	MARKER STRIP
	332-142	2	TERMINAL
	332-557	1	FASTENER-PAPER
	301C2723	1	CONTROL BOX & PANEL ASSY
	301B1198	1	BRACKET-CONTROL BOX MTG
	301C1244	1	COVER-
	301B1271	1	ENDPLATE
	98A1812	1	SILKSCREEN
	517-19	1	BUTTON-DOT
W1	336A1432	1	LEAD ASSY
W2	336A1283	1	LEAD ASSY
W3	336A1430	1	LEAD ASSY
W4	336A565	1	LEAD ASSY
W5	336A1045	1	LEAD ASSY
W6	336A1431	1	LEAD ASSY
	PARTS LIST (ENG/GEN)		
BT1		1	BATTERY-12V
C3	312A182(REF)	1	CAPACITOR, 0.1 MFD (SPEC J)
E1		1	CHOKE-SISSON
E2,3		2	SPARK PLUG
G1		1	GENERATOR
K6	149P650(REF)	1	PUMP-FUEL
S2		1	BREAKER & CAP ASSY
K7		1	SOLENOID-GAS
S4	309A2(REF)	1	SWITCH-HIGH AIR TEMP
S3	309A10(REF)	1	SWITCH-LOW OIL PRESS
T1		1	COIL-IGN(ONAN)

611C914

* WHEN USED

REV	REVISION	DATE
J	GENERAL REVISION	8-23-67
H	ADDED DASH NO.	8-17-67
G	ADDED K7 & RELAYS, W6	8-11-67
F	ADDED MODEL	8-11-67
E	WAS W6 307A140	8-11-67
D	W6 WAS 307P318	8-11-67
C	ADDED S4	7-13-67
B	ADDED MODEL	7-13-67
A	ADDED MODEL	7-13-67
	ADDED MODEL 5CCK-IRV/5360T	6-23-67

G	4CCK-IRV6000/123
C	4CCK-IRV6000/16B1J
B	4CCK&4CCK-IRV6000/13
A	5CCK-IRV/5360T

Onan — DIVISION OF ONAN CORPORATION

DATE 4-17-67 BY CDF

611C914

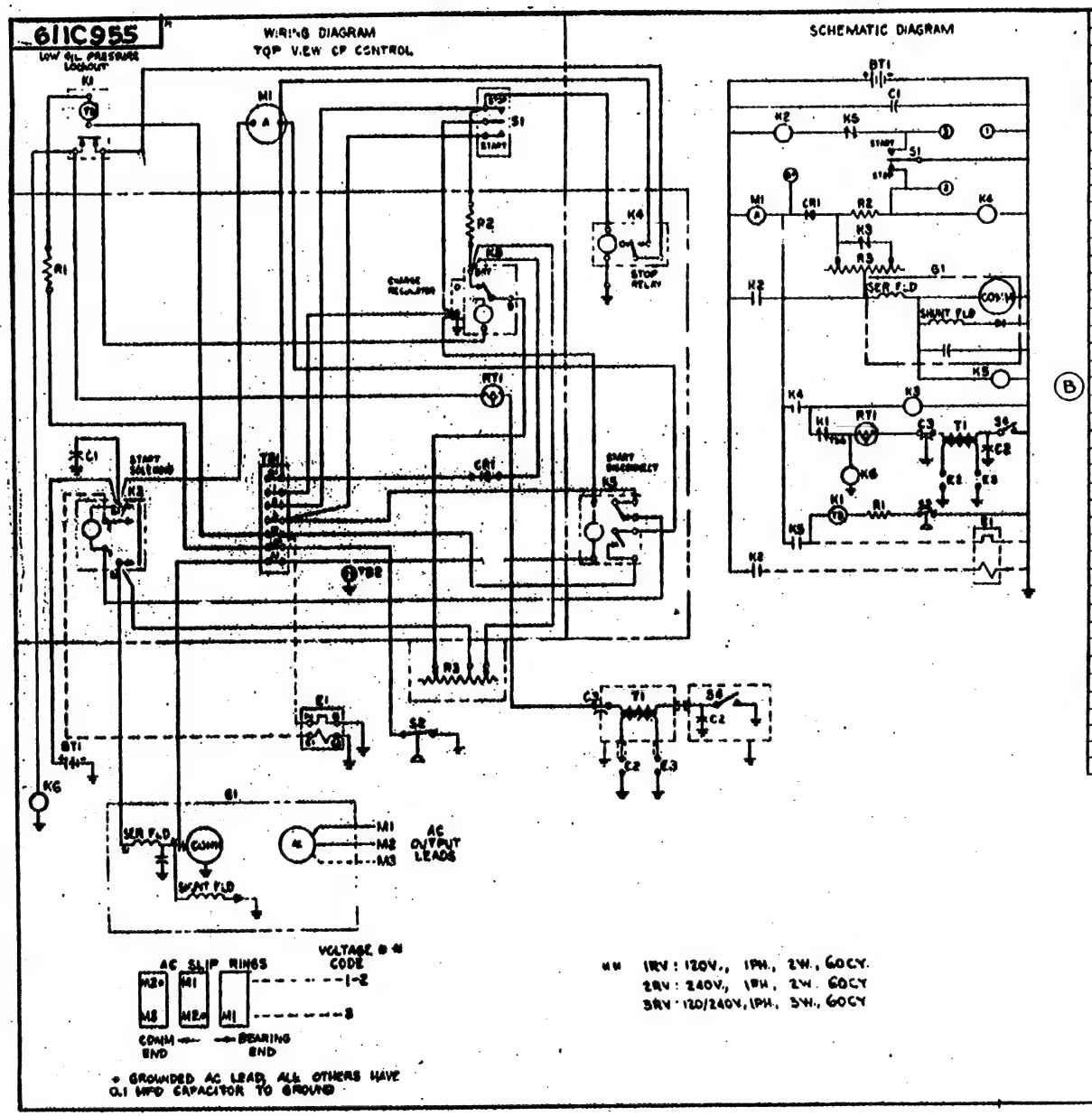

PARTS LIST (CONTROL BOX)

REF.DES	PART NO.	QTY	DESCRIPTION
CR1	305A235	1	DIODE - REVERSE CURRENT
	305A254	1	HEAT SINK
C1	312A57	1	CAPACITOR 1.0 MFD
K1	320B104	1	RELAY - LOW OIL PRESS. LOCKOUT
K2	307B845	1	RELAY - START SOLENOID
K3	305B383	1	RELAY - 2 STEP CHARGE REG
K4	307B253	1	RELAY - STOP
K5	307B642	1	RELAY - START DISCONNECT
M1	302A58	1	AMMETER - CHARGE, 10-0-10
R1	304A217	1	RESISTOR - 1 OHM, 10 W
R2	304A251	1	RESISTOR - 30 OHM, 5 W
R3	304A483	1	RESISTOR - HIGH LOW CHARGE
RT1	304A60	1	RESISTOR - HYTEMCO 1.72 OHM, 25W
S1	308P154	1	SWITCH - START STOP
TB1	332A745	1	BLOCK - TERMINAL
	332A922	1	STRIP - MARKER
TB2	332A142	1	TERMINAL
	301C2525	1	CONTROL BOX PANEL ASSY
	301B1198	1	BRACKET - CONTROL BOX MTG.
	301C1244	1	COVER
	301B2528	1	BOX - RESISTOR MTG.
	301B2597	1	END PLATE
	339B357	1	ILLUSTRATION - SUPPRESSION
	98A1812	1	SILKSCREEN - START STOP
	98A1625	1	SILKSCREEN - EMERGENCY RELAY

PARTS LIST (ENG-GEN)

BT1		1	BATTERY 12V
C2		1	CAPACITOR - IGNITION POINTS
C3		1	CAPACITOR - FEED THRU
		1	
K6		1	FUEL PUMP
E1		1	CHOKE - ENGINE (WHEN USED)
E2, E3		2	SPARK PLUGS
G1		1	GENERATOR
S2		1	SWITCH - LOW OIL PRESSURE
S4		1	SWITCH - IGNITION POINTS
T1		1	COIL - IGNITION

611C955

-01	6CCKB-3RV6000/1B 6CCKB-2RV6000/1B 6CCKB-1RV6000/1B	12 V REMOTE STARTING

ADDED CASH 1/2

OGEN

2-27-68 GEM

WIRING & SCHEMATIC DIAGR

ENG-GEN CONTROL

611C955

611C957

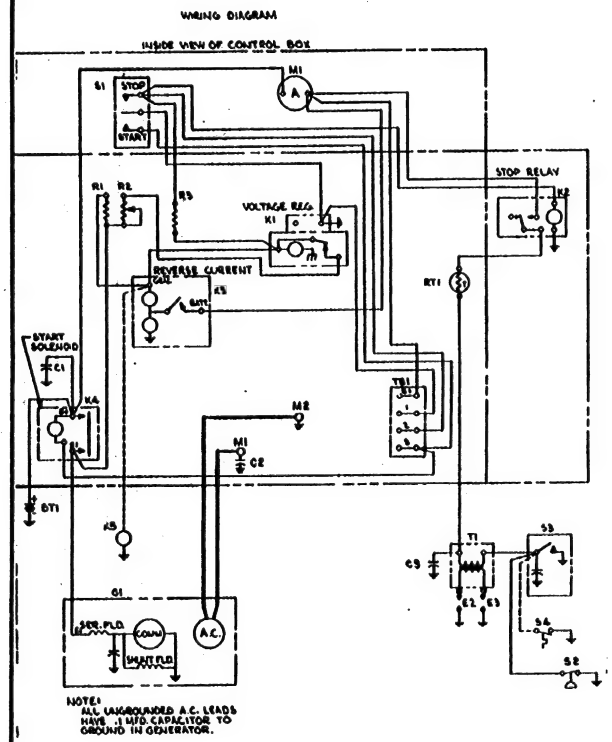

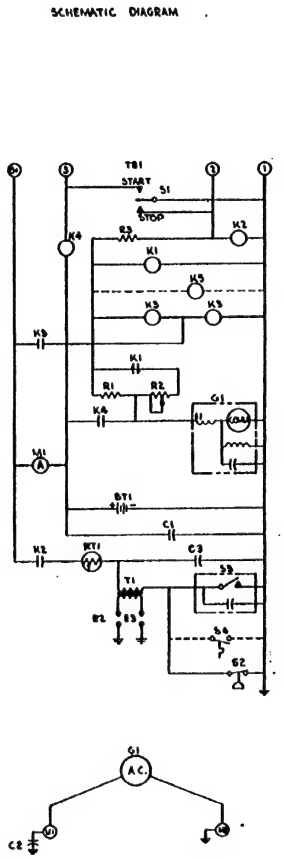

	REF. NO.	PART NO.	QTY. USED	PART DESCRIPTION
	C1	312A57	1	Capacitor 1.0 MFD.
	C2	312A58	1	Capacitor 0.1 MFD.
	K1	305A1	1	Relay, 2-Step Voltage Reg.
	K2	307B253	1	Relay, Stop
	K3	307B180	1	Relay, Reverse Current
Ⓑ	K4	307B1046	1	Relay, Start Solenoid
	M1	302A58	1	Ammeter, Charge 10-0-10
	R1	304A344	1	Resistor, 1-Ohm, 25 Watt
	R2	304A175	1	Resistor, 1-Ohm, 50 Watt, Adj.
	R3	304A251	1	Resistor, 30-Ohm, 5 Watt
	RT1	304A60	1	Resistor, Hytemco 1.72-Ohm, 25 Watt
	S1	308P154	1	Switch, Stop/Start
	TB1	332A537	1	Terminal Block
		332A540	1	Marker Strip
		332-142	2	Terminal
		301C2723	1	Control Box & Panel Assy.
		301B1198	1	Mounting Bracket
				Coil
		301C1244	1	Cover (RV Models)
		301B1271	1	Endplate (RV Models)
		517-19	1	Dot - Button
	BT1		1	Battery, 12-Volt
	C3	312A35	1	Capacitor 0.1 MFD.
		312A162	1	Capacitor 0.1 MFD. (Spec J Models)
	E2, 3		2	Spark Plugs
	G1		1	Generator
Ⓐ	*K5	307P312	1	Gas Solenoid
	S3		1	Breaker & Cap Assembly
	*S4	309A2	1	Switch, High Air Temp.
	S2	309A10	1	Switch, Low Oil Pressure
	T1		1	Ignition Coil (ONAN)

* - When Used.

NOTE: UNLESS OTHERWISE NOTED, ALL COMPONENTS ARE SHOWN IN THE DE-ENERGIZED POSITION.

MODEL NO. 5CCK-IRV6000/1BJ	120V., 1PH., 2W., 60 CY.
3-15-68	"CFM"
WIRING & SCHEMATIC DIAGRAM, ENG-GEN. CONTROL	
611C957	

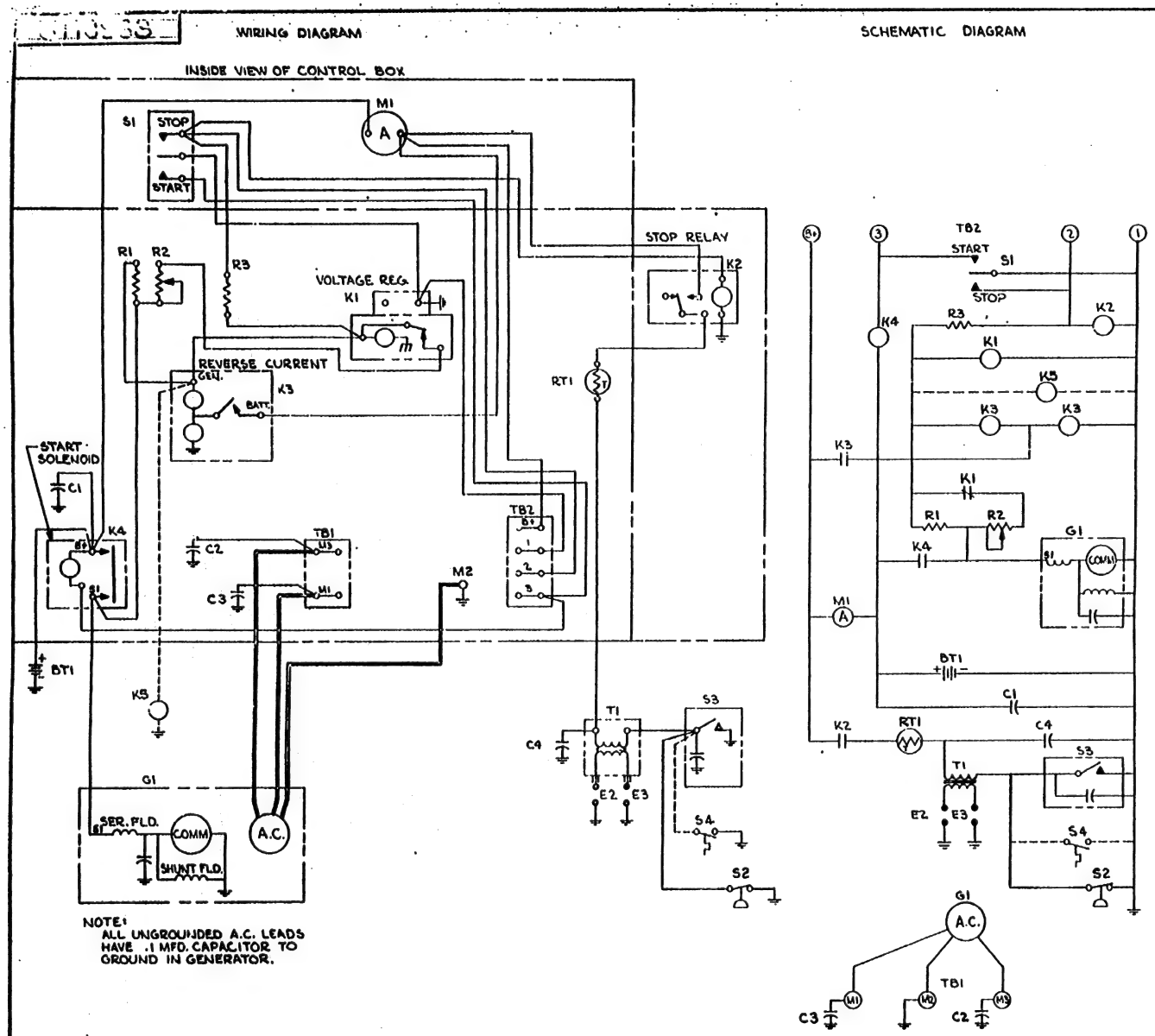

PARTS LIST			
REF DES	PART NO.	QTY	DESCRIPTION
C1	312A57	1	CAPACITOR 1.0 MFD.
C2,3.	312A58	2	CAPACITOR 0.1 MFD.
K1	305A1	1	RELAY - 2 STEP VOLTAGE REG.
K2	307B253	1	RELAY - STOP
K3	307B180	1	RELAY - REVERSE CURRENT
K4	307B1046	1	RELAY - START SOLENOID
M1	302A58	1	AMMETER - CHARGE 10-0-10
R1	304A344	1	RESISTOR - 1-OHM, 25 W
R2	304A175	1	RESISTOR - 1-OHM, 50 W, ADJ.
R3	304A251	1	RESISTOR - 30-OHM, 5 W
RT1	304A60	1	RESISTOR - HYTEMCO 1.72-OHM, 25 W
S1	308P154	1	SWITCH - STOP, START
TB1	332A231	1	TERMINAL BLOCK
	332A539	1	MARKER STRIP
TB2	332A537	1	TERMINAL BLOCK
	332-142	1	TERMINAL
	301C2723	1	CONTROL BOX & PANEL ASSY.
	301B1198	1	MTG. BRACKET
	301C1244	1	COVER (RV MODELS)
	301B1271	1	ENDPLATE (RV MODELS)
	98A1812	1	SILK SCREEN
	517-19	1	DOT BUTTON
		PARTS LIST (ENL-GEN)	
BT1		1	BATTERY, 12-VOLT
C4	312A35	1	CAPACITOR 0.1 MFD
	312A162	1	CAPACITOR 9.1 MFD (SPEC J MODELS)
C2,3		2	SPARK PLUGS
G1		1	GENERATOR
* K5	307P312	1	GAS SOLENOID
S3		1	BREAKER & CAP ASSY
* S4	309A2	1	SWITCH - HIGH AIR TEMP.
S2	309S10	1	SWITCH - LOW OIL PRESS.
T1		1	IGNITION COIL - (ONAN)

611C963

* WHEN USED

A	WAS No 807B40		2-4-68
LTR	REVISION	CKD	DATE

DDR DIVISION OF STUDEBAKER CORPORATION

MODEL NO.	DATE 4-8-68	CK CDR	CKD G.P.T.
5CCK-3RV6000/13J	NAME WIRING & SCHEMATIC DIAGRAM, ENG-GEN. CONTROL		
120/240 V., 1 PH., 3 W., 60 CY.	DWG NO 611C963		

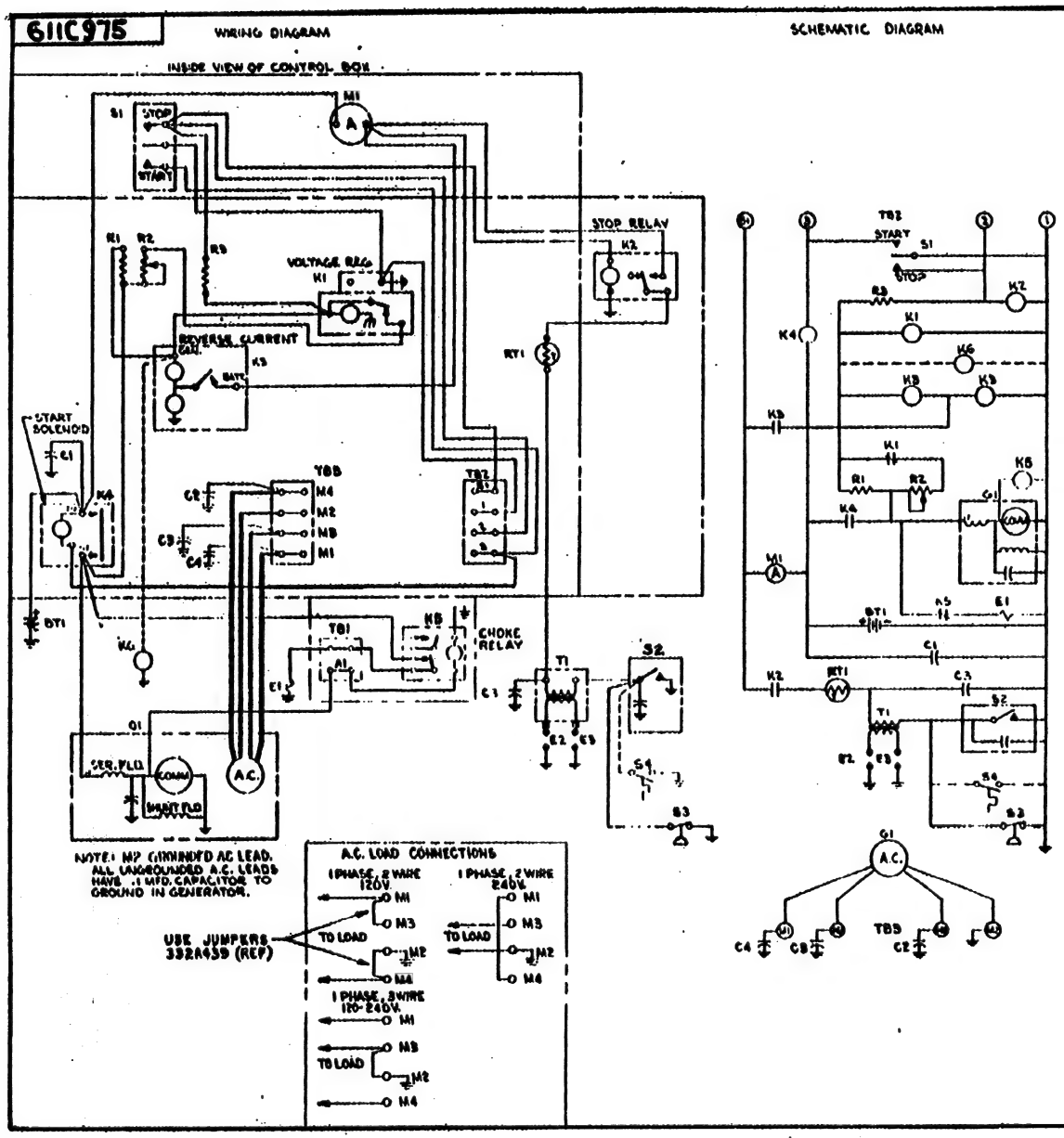

REF DES	PART NO.	QTY	DESCRIPTION
C1	312A57	1	CAPACITOR 1.0 MFD.
C2,C4	312A58	2	CAPACITOR 0.1 MFD
C3	312A58	1	CAPACITOR 0.1 MFD 250VAC
K1	305A1	1	RELAY - 2 STEP VOLTAGE REG.
K2	307B253	1	RELAY - STOP
K3	307B180	1	RELAY - REVERSE CURRENT
K4	307B104 G	1	RELAY - START SOLENOID
K5	307B642	1	RELAY - CHOKE
M1	302A58	1	AMMETER - CHARGE 10-0-10
R1	304A344	1	RESISTOR - 1-OHM, 25 W
R2	304A175	1	RESISTOR - 1-OHM, 50 W, ADJ.
R3	304A251	1	RESISTOR - 30-OHM, 5 W
RT1	304A60	1	RESISTOR - HYTERCO 1.72-OHM, 25 W.
S1	309P154	1	SWITCH - STOP, START
TB1	332A609	1	TERMINAL BLOCK
		1	
TB2	332A537	1	TERMINAL BLOCK
	332A763	1	MARKER STRIP
TB3	332A254	1	TERMINAL BLOCK
	332A435	1	MARKER STRIP
	332A439	2	JUMPER - TERMINAL
	301C2723	1	CONTROL BOX & PANEL ASSY
	301D1198	1	MTG. BRACKET
	301B2722	1	RELAY & TERM. BLOCK BOX
	301C1244	1	COVER
	301D1271	1	ENDPLATE
	98A1012	1	SILK SCREEN
	517-19	1	DOT BUTTON
		PARTS LIST (ENG-GEN)	
BT1		1	BATTERY, 12-VOLT
C3	312A162	1	CAPACITOR 0.1 MFD (SPEC. J MODELS)
E1		1	BISSON CHOKE
E2,3		2	SPARK PLUGS
G1		1	GENERATOR
K6	149P650	1	FUEL PUMP (WHEN USED)
S2		1	BREAKER & CAP ASSY.
S4	309A2	1	SWITCH - HIGH AIR TEMP
S3	309A10	1	SWITCH - LOW OIL PRESS.
T1		1	IGNITION COIL - (CONAN)

* WHEN USED

9L6D119

01	5CCK-3CRV6000/1J 4.0CCK-3CR/6000J	5-26-68	CEM
	120/240V., 1PH., 4W., 60CY.	WIRING SCHEMATIC DIAGRAM, ENG-GEN CONTROL	611C975

Onan

611C1002

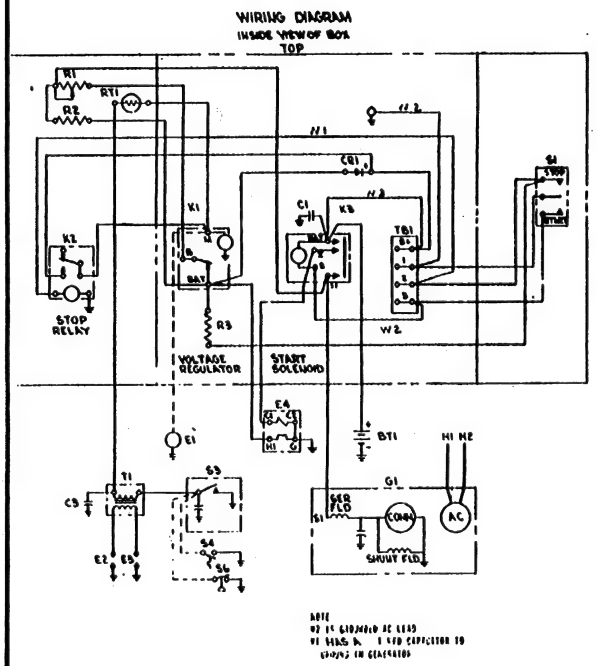

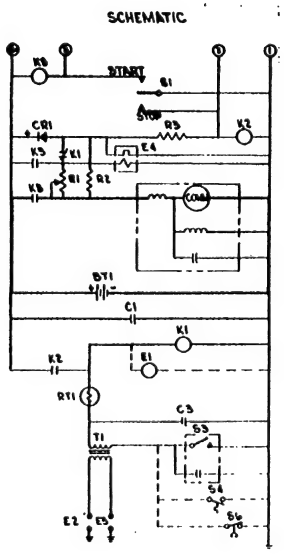

REF. NO.	PART NO.	QTY. USED	PART DESCRIPTION
	312A185	1	Capacitor Assembly
C1	312A57(Ref)	1	Capacitor 1.0 MFD.
	305A494	1	Diode Assembly
CR1	305B235(Ref)	1	Diode, Reverse Current
	305A254(Ref)	1	Heat Sink
K1	305B383	1	Relay, 2-Step Voltage Ref.
	307A1120	1	Relay & Lead Assy-Stop
K2	307B253(Ref)	1	Relay, Stop
K3	307B845	1	Relay, Start Solenoid
	304A681	1	Resistor Assembly
R1	304A175(Ref)	1	Resistor, Adj, 1-Ohm, 50 Watt
R2	304A344(Ref)	1	Resistor, 1-Ohm, 25 Watt
	304A680	1	Resistor & Lead Assembly
RT1	304A60(Ref)	1	Resistor, Hytemco 1.72-Ohm, 25 Watt
	308A294	1	Switch Assembly, RMT Start
S1	308P154(Ref)	1	Switch, Start/Stop
R3	304A251(Ref)	1	Resistor, 30-Ohm, 5 Watt
TB1	332A537	1	Terminal Block
	332A566	1	Marker Strip
W1	336A2024	1	Lead Assembly 16″
W2	336A1045	1	Lead Assembly 8″
W3	336A2023	1	Lead Assembly 12″
(F)	301B3227	1	Bracket, Control Box Mtg.
(E)	301D3228	1	Control Box
	301B3102	1	Cover
(L)	332-142	1	Terminal
(B)	508-1	3	Grommet
(W)	517-19	1	Dot-Button
BT1		1	Battery, 12-Volt
C3	312A162	1	Capacitor 0.1 MFD.
*E1		1	Fuel Pump
E2, 3		2	Spark Plug
E4		1	Choke, Thermo-Mag.
G1		1	Generator
S3		1	Breaker & Cap Assembly
*S4	309A2	1	Switch-High Air Temp.
*S6	309A10	1	Switch-Low Oil Pressure
T1		1	Ignition Coil (ONAN)

* - When Used.

	GENERAL REVISIONS			
N	ADDED DASH NO.			
M	ADDED 517-19			
L	REV. 55 308-87			
K	REV. 52, 308P2			
J	REV. 4.0CCK-IR/6200/IH			
H	ADDED 4.0CCK-IR/8664J			
G	ADDED 4.0CCK-IR/8216J			
F	ADDED 301B3187			
E	WAS 301D3101			
D	ADDED 508-1 QTY 3			
C	WAS 9001L-IR/6000/IH			
B	WAS QTY 2			
A	C2, STRAP REMOVED			

Onan

NOTE: UNLESS OTHERWISE NOTED ALL COMPONENTS ARE SHOWN IN THE DE-ENERGIZED POSITION

01	4.0CCK-IR/8216J 4.0CCK-IR/8444J	120V. 2W	1PH 60CY

11-13-68 | CFM | C.F.H. | W18

WIRING & SCHEMATIC DIAGRAM ENG-GEN CONTROL

611C1002

611C1035

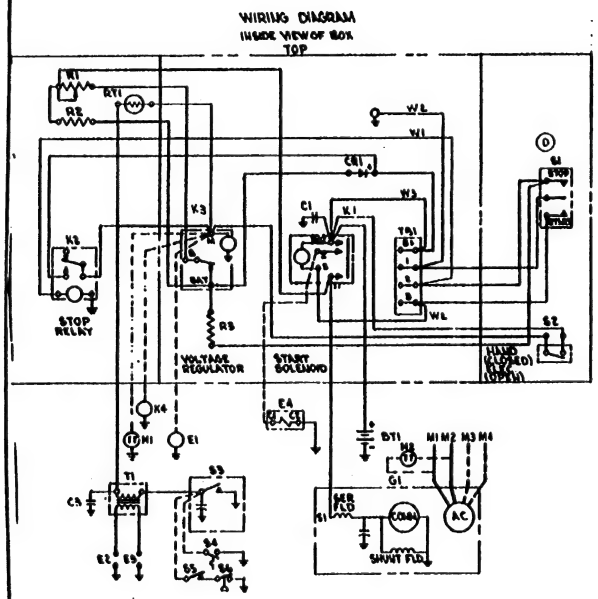

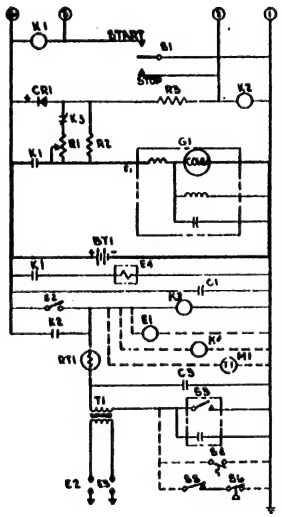

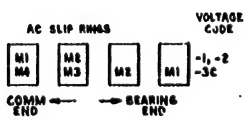

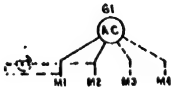

REF. NO.	PART NO.	QTY. USED	PART DESCRIPTION
C1	312A185	1	Capacitor Assembly
	305A494	1	Diode Assembly
CR1	305B235(Ref)	1	Diode, Reverse Current
	305A254(Ref)	1	Heat Sink
K1	307B845	1	Relay, Start Solenoid
	307A1120	1	Relay & Lead Assy., Stop
K2	307B253(Ref)	1	Relay, Stop
K3	305B383	1	Relay, 2-Step Voltage
	304A681	1	Resistor Assembly
R1	304A175(Ref)	1	Resistor, Adj. 1-Ohm, 50 Watt
R2	304A344(Ref)	1	Resistor, Fixed 1-Ohm, 25 Watt
	304A680	1	Resistor & Lead Assembly
RT1	304A60 (Ref)	1	Resistor, 1.72-Ohm, 25 Watt
	308A294	1	Switch Assy., RMT Start
S1	308P154(Ref)	1	Switch, Start/Stop
R3	304A251(Ref)	1	Resistor, 30-Ohm, 5 Watt
	308A300	1	Switch & Lead Assembly
S2	308P2 (Ref)	1	Switch (Hand/Elect. Start)
TB1	332A537	1	Terminal Block
	332A566	1	Marker Strip
W1	336A2024	1	Lead Assy. 16″
W2	336A1045	2	Lead Assy. 8″
W3	336A2023	1	Lead Assy. 12″
	301B3227	1	Bracket, Control Box Mtg.
	301D3228	1	Control Box
	301B3102	1	Cover
	508-1	3	Grommet
BT1		1	Battery, 12-Volt
C3	312A162	1	Capacitor 0.1 MFD.
E1		1	Fuel Pump
E2,3		2	Spark Plug
*E4		1	Choke, Sisson
G1		1	Generator
S3		1	Breaker & Cap Assembly
*S4	309A2	1	Switch, High Air Temp.
*S5	308-97	1	Switch
*S6	309A10	1	Switch, Low Oil Pressure
T1		1	Ignition Coil (ONAN)
*K4		1	Solenoid, Gas
*M1		1	Meter, Running Time, 12 VDC
*M2		1	Meter, Running Time, 120 VDC

* - When Used.

PLACE SILKSCREEN ON INSIDE OF COVER

RECONNECTION FOR 3C

NOTE: UNLESS OTHERWISE NOTED, ALL COMPONENTS ARE SHOWN IN THE DE-ENERGIZED POSITION.

H	FIELD STRIPE TERMINAL
G	ADDED KIT & SER
F	MINOR REVISION & KK
E	GENERAL REVISION
D	MAY 1X MONTH OF REVISION
C	ADDED MODEL 3C
B	ADDED CASE NO.
A	ADDED MODELS

Onan DIVISION OF STUDEBAKER CORPORATION

WIRING DIAGRAM
CONTROL - GEN SET

611C1035

611C1036

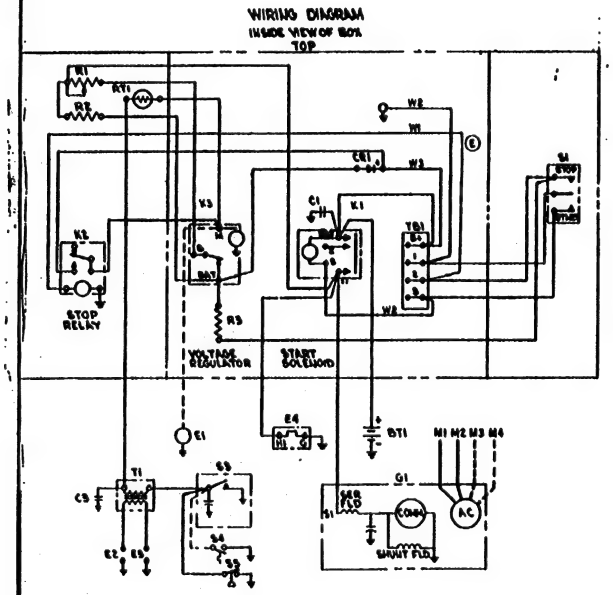

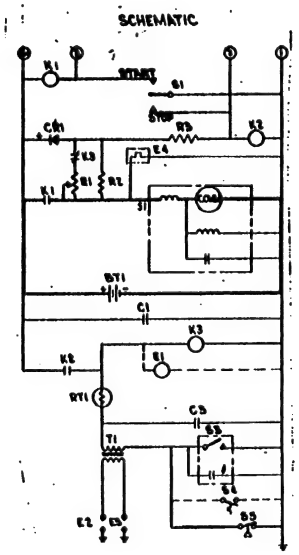

NOTE
W #3 IS GROUNDED AC LEAD
OTHERS HAVE .1 MFD CAPACITOR TO GROUND IN GENERATOR.

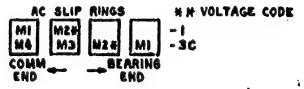

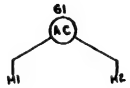

	REF. NO.	PART NO.	QTY. USED	PART DESCRIPTION
	C1	312A185	1	Capacitor Assembly
		309A494	1	Diode Assembly
	CR1	305B235(Ref)	1	Diode - Reverse Current
		305A254(Ref)	1	Heat Sink
	K1	307B845	1	Relay - Start Solenoid
		307A1120	1	Relay & Lead Assy.-Stop
	K2	307B253(Ref)	1	Relay, Stop
	K3	305B383	1	Relay, 2-Step Voltage
		304A681	1	Resistor Assembly
	R1	304A175(Ref)	1	Resistor Adj., 1-Ohm, 50 Watt
	R2	304A344(Ref)	1	Resistor, Fixed, 1-Ohm, 25 Watt
		304A680	1	Resistor & Lead Assembly
	RT1	304A60(Ref)	1	Resistor, 1 .72-Ohm, 25 Watt
		308A294	1	Switch Assy., RMT Start
	S1	309P154(Ref)	1	Switch, Start/Stop
ⓐ	R3	304A251(Ref)	1	Resistor, 30-Ohm, 5 Watt
	TB1	332A537	1	Terminal Block
		332A566	1	Marker Strip
	W1	336A2024	1	Lead Assembly 16″
	W2	336A1045	1	Lead Assembly 8″
	W3	336A2023	1	Lead Assembly 12″
		301B3227	1	Bracket, Control Box Mtg.
		301D3228	1	Control Box
		301B3102	1	Cover
ⓒ		517-19	1	Dot-Button
		508-1	3	Grommet
	BT1		1	Battery, 12 Volt
	C3	312A162	1	Capacitor, 0.1MFD.
	*E1		1	Fuel Pump
	E2, 3		2	Spark Plug
	E4		1	Choke, Electric
	G1		1	Generator
	S3		1	Breaker & Cap Assembly
	*S4	309A2	1	Switch, High Air Temp.
	S5	309A10	1	Switch, Low Oil Pressure
	T1		1	Ignition Coil (ONAN)

* - When Used.

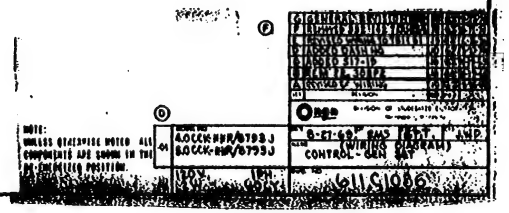

611C1037

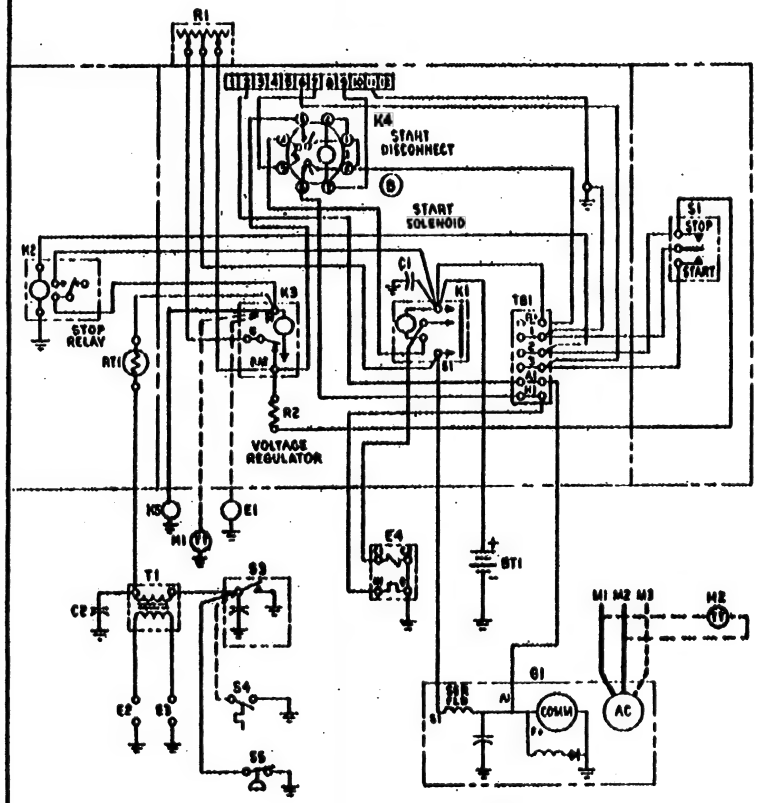

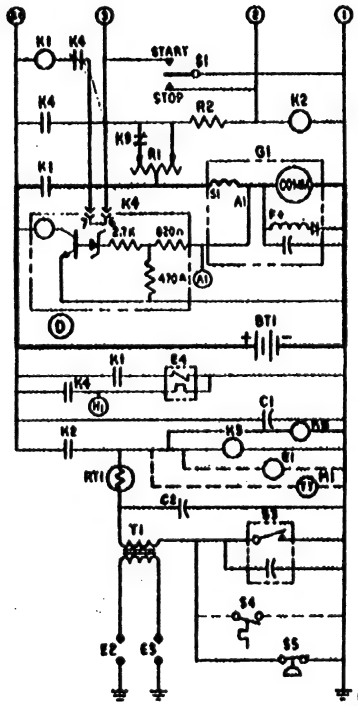

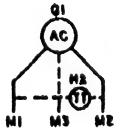

NOTE;
M2 IS GROUNDED AC LEAD
M1 & M3 HAVE .1 MFD CAPACITOR TO GROUND IN GENERATOR

NOTE:
UNLESS OTHERWISE NOTED, COMPONENTS ARE SHOWN IN DE-ENERGIZED POSITION

PARTS LIST

REF. DES.	PART NO.	QTY.	DESCRIPTION
C1	312A185	1	CAPACITOR ASSY
K1	307U845	1	RELAY-START SOLENOID
K2	307U1052	1	RELAY-STOP
K3	305U383	1	RELAY-VOLTAGE REGLTR (2 STEP)
K4	306B229	1	RELAY ASSY-START DISC
R1	304A483	1	RESISTOR-TAPPED (LOW/LOW CHG)
	304A690	1	RESISTOR & LEAD ASSY
RT1	304A00(REF)	1	RESISTOR-FIXED 25 W, 1.72Ω
	308A294	1	SWITCH ASSY-RUN START
S1	309A154(REF)	1	SWITCH-TOGGLE (START/STOP)
R2	304A251(REF)	1	RESISTOR-FIXED 30 OHM, 5 W
TB1	332A099	1	TERMINAL BLOCK
	332A1209	1	MARKER STRIP
	30103235	1	RESISTOR MTG BOX
	30103227	1	BRACKET-CONT BOX MTG
	30103233	1	CONTROL BOX
	30103102	1	COVER
	90A2117	1	SILKSCREEN
	SCB-1	4	GROMMET
	30781070 (REF)	1	RELAY-START DISCONNECT
	300A734 (REF)	1	AMPLIFIER - START DISC
	323B807(REF)	1	SOCKET ASSY - START DISC
	301A3306(REF)	1	SPRING
PARTS LIST (ENG-GEN) (REF)			
BT1		1	BATTERY-12VOLT
C2	312A162	1	CAPACITOR 0.1 MFD
E1		1	FUEL PUMP
E2,3		2	SPARK PLUG
E4		1	CHOKE-THERMO-MAG
G1		1	GENERATOR
S3		1	BREAKER & CAP ASSEMBLY
S4	309A2	1	SWITCH-HIGH AIR TEMP
S5	309A10	1	SWITCH-LOW OIL PRESS
T1		1	IGNITION COIL (ONAN)
K5		1	VALVE-POSITIVE FUEL SOL SHUT OFF
M1		1	METER-RUNNING TIME, 12 VDC
M2		1	METER-RUNNING TIME, 120 VAC

*WHEN USED

611C1037

J	ADDED VALVE
H	REV 301A3306 (2) HWKS
G	ADDED S, K4 (REF) DWGS
F	ADDED M1 & M2
E	REV 332-1162 TERMINAL
B	[illegible]
B	[illegible]
D	[illegible]
C	[illegible]
B	[illegible]
A	[illegible]
[illegible]	[illegible]

Onan

-01	6.0 CCKB-1R/6000C 6.0 CCKB-3R/6000C	12-18-69	PW H
	120/240 V., 1 PH, 3 W., 60 CY	(WIRING DIAGRAM) CONTROL - GEN. SET	
		611C1037	

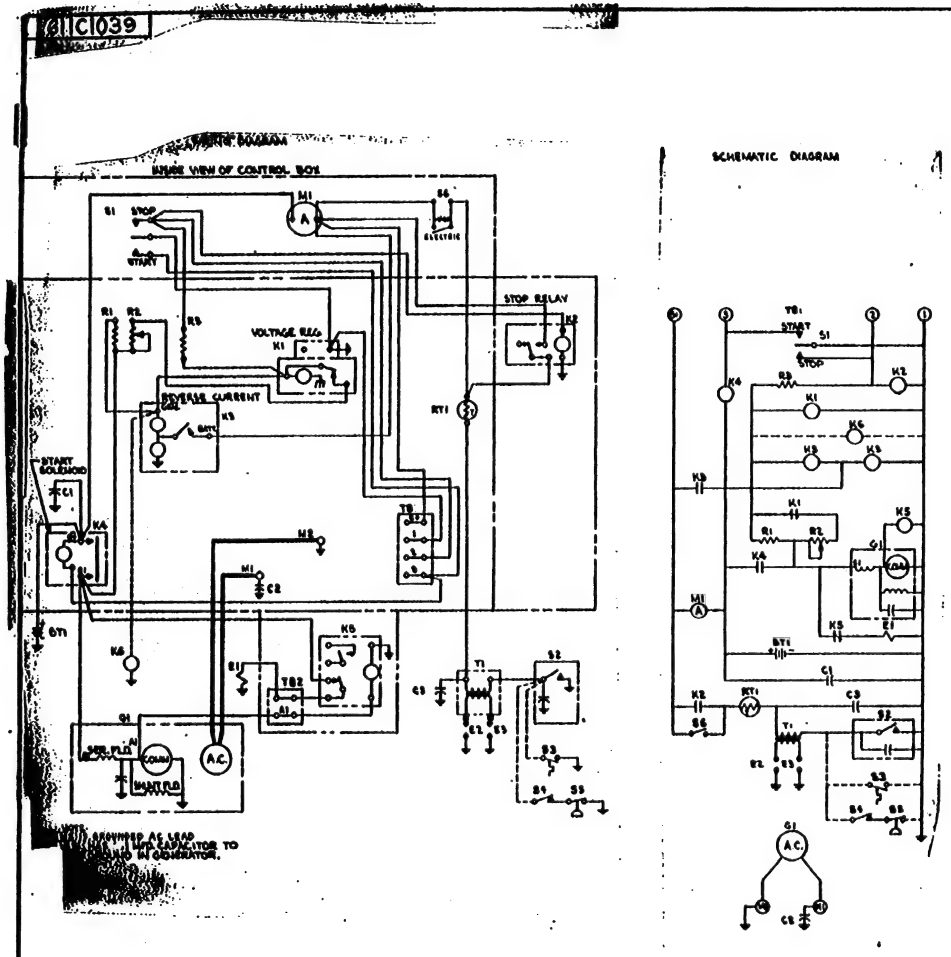

REF. NO.	PART NO.	QTY. USED	PART DESCRIPTION
C1	312A57	1	Capacitor 1.0 MFD.
C2	312A58	1	Capacitor 0.1 MFD.
K1	305A1	1	Relay, 2-Step Voltage Reg.
K2	307B253	1	Relay, Stop
K3	307B180	1	Relay, Reverse Current
K4	307B1046	1	Relay, Start Solenoid
K5	307B642	1	Relay, Choke
M1	302A58	1	Ammeter, Choke 10-0-10
R1	304A344	1	Resistor, 1-Ohm, 25 Watt
R2	304A175	1	Resistor, 1-Ohm, 50 Watt, Adj.
R3	304A251	1	Resistor, 30-Ohm, 5 Watt
RT1	304A60	1	Resistor, Hytemco, 1.72-Ohm, 25 Watt
S1	308P154	1	Switch, Start/Stop
S6	308P2	1	Switch, Hand/Elect. Start
TB1	332A537	1	Terminal Block
	332A540	1	Marker Strip
	332-142	2	Terminal
TB2	332A609	1	Terminal Block
	301B2722	1	Relay & Terminal Block Box
	301C2723	1	Control Box & Panel Assy.
	301B1198	1	Mounting Bracket
	301C1244	1	Cover
	301B1271	1	Endplate
BT1		1	Battery, 12-Volt
C3	312A35(Ref)	1	Capacitor 0.1 MFD.
	312A162(Ref)	1	Capacitor 0.1 MFD. (Spec J Models)
*E1		1	Choke, Sisson Electric
E2, 3		2	Spark Plugs
G1		1	Generator
*K6	307P312(Ref)	1	Fuel Solenoid
S2		1	Breaker & Cap Assembly
*S3	309A2(Ref)	1	Switch, High Air Temp.
*S4	308-97(Ref)	1	Switch
*S5	309A10(Ref)	1	Switch, Low Oil Pressure
T1		1	Ignition Coil - (ONAN)

* - When Used.

A	01	60CCK-1R/881BJ. 60CCK-1M/881BJ 120V, 1PH, 2W, 60CY

9-4-69 CDR
WIRING DIAGRAM CONTROL-GEN SET
611C1039

611C1047

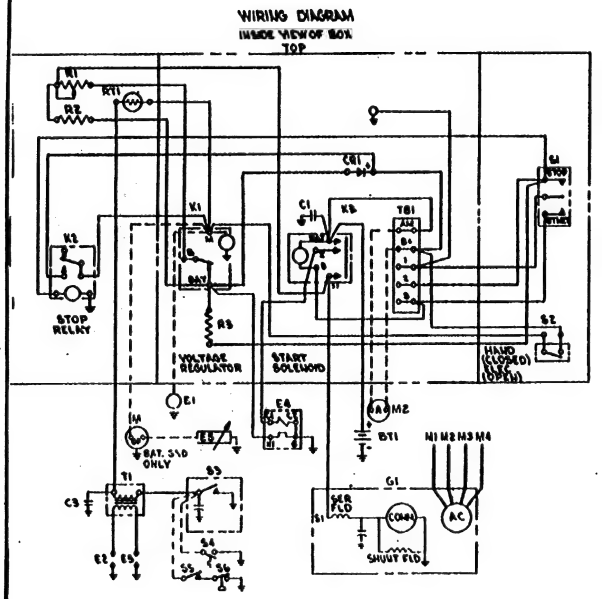

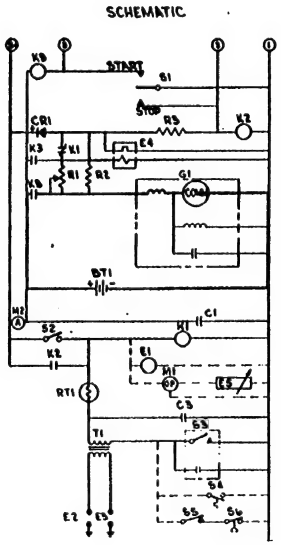

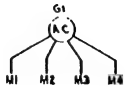

REF. NO.	PART NO.	QTY. USED	PART DESCRIPTION
C1	312A57	1	Capacitor 1.0 MFD.
CR1	305B235	1	Diode, Reverse Current
	305A254	1	Heat Sink
K1	305B383	1	Relay, 2-Step Voltage Reg.
K2	307B253	1	Relay, Stop
K3	307B845	1	Relay, Start Solenoid
R1	304A175	1	Resistor, 1-Ohm, 50 Watt, Adj.
R2	304A344	1	Resistor, 1-Ohm, 25 Watt
R3	304A251	1	Resistor, 30-Ohm, 5 Watt
RT1	304A60	1	Resistor, Hytemco, 1.72-Ohm, 25 Watt
S1	308P154	1	Switch, Start/Stop
S2	308P2	1	Switch, Hand/Elect. Start
© TB1	332A604	1	Block, Terminal
	332A613	1	Strip, Marker
	301B3227	1	Bracket, Control Box Mtg.
⓪	301D3294	1	Control Box
	301B3102	1	Cover
	332-142	1	Terminal
	508-1	3	Grommet
BT1		1	Battery, 12-Volt
C3	312A162	1	Capacitor 0.1 MFD.
* E1		1	Fuel Pump
E2, 3		2	Spark Plug
E4		1	Choke, Thermo Mag.
G1		1	Generator
S3		1	Breaker & Cap Assembly
* S4	309A2	1	Switch, High Air Temp.
* S5	308-97	1	Switch
* S6,	309A10	1	Switch, Low Oil Pressure
T1		1	Ignition Coil (ONAN)
Ⓐ E5	193A108	1	Sender - Oil Pressure
M1	193A107(Ref)	1	Gauge, Oil Pressure
M2	302A58(Ref)	1	Ammeter

* - When Used.

PLACE SILKSCREEN ON INSIDE OF COVER

RECONNECTION CHART

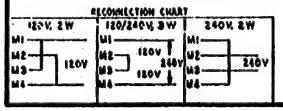

-01	5.0 CCK-3KR/9321 J 5.0 CCK-3KR/9494 N	
120V, 2W	1PH, 60CY	

Onan

WIRING DIAGRAM
CONTROL - GEN SET

611C1047

611C1049

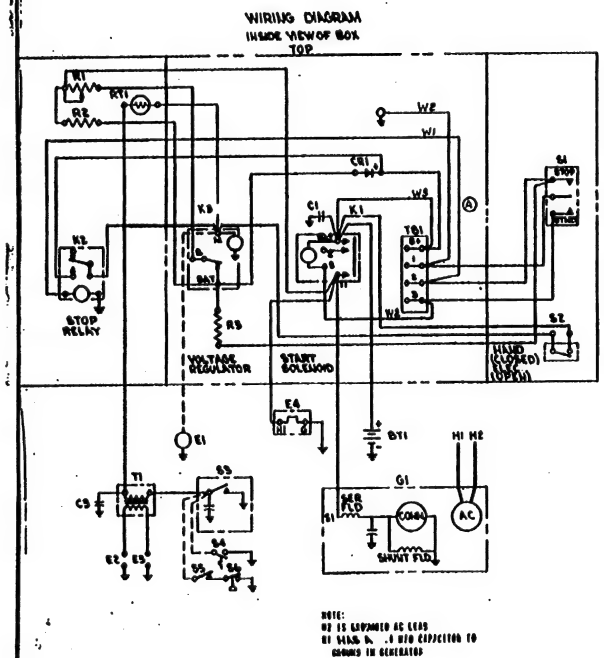

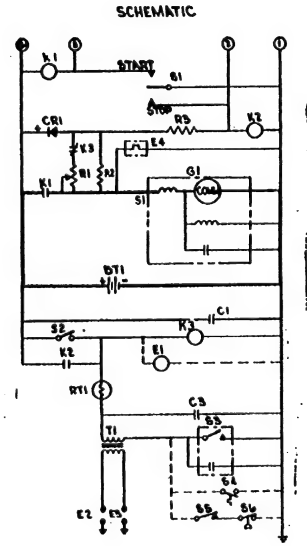

REF. NO.	PART NO.	QTY. USED	PART DESCRIPTION
C1	312A185	1	Capacitor Assembly
	305A494	1	Diode Assembly
CR1	305B235(Ref)	1	Diode, Reverse Current
	305A254(Ref)	1	Heat Sink
K1	307B845	1	Relay, Start Solenoid
	307A1120	1	Relay & Lead Assy-Stop
K2	307B253(Ref)	1	Relay, Stop
K3	305B383	1	Relay, 2-Step Voltage
	304A681	1	Resistor Assembly
R1	304A175(Ref)	1	Resistor, Adj., 1-Ohm, 50 Watt
R2	304A344	1	Resistor, Fixed, 1-Ohm, 25 Watt
	304A680	1	Resistor & Lead Assembly
RT1	304A60(Ref)	1	Resistor, 1.72-Ohm, 25 Watt
	308A294	1	Switch Assy., RMT Start
S1	308P154(Ref)	1	Switch, Start/Stop
R3	304A251(Ref)	1	Resistor, 30-Ohm, 5 Watt
	308A300	1	Switch & Lead Assembly
S2	308P2(Ref)	1	Switch (Hand/Elect. Start)
TB1	332A537	1	Terminal Block
	332A566	1	Marker Strip
W1	336A2024	1	Lead Assembly 16"
W2	336A1045	2	Lead Assembly 8"
W3	336A2023	1	Lead Assembly 12"
	301B3227	1	Bracket, Control Box Mtg.
	301D3228	1	Control Box
	301B3102	1	Cover
	508-1	3	Grommet
BT1		1	Battery, 12-Volt
C3	312A162	1	Capacitor, 0.1 MFD.
E1		1	Fuel Pump
E2, 3		2	Spark Plug
E4		1	Choke, Electric
G1		1	Generator
S3		1	Breaker & Cap Assembly
*S4	309A2	1	Switch, High Air Temp.
*S5	308-97	1	Switch
*S6	309A10	1	Switch, Low Oil Pressure
T1		1	Ignition Coil (ONAN)

* - When Used.

NOTE:
UNLESS OTHERWISE NOTED, ALL COMPONENTS ARE SHOWN IN THE DE-ENERGIZED POSITION.

3-10-70	COR
WIRING DIAGRAM CONTROL - GEN SET	
611C1049	

611C1050

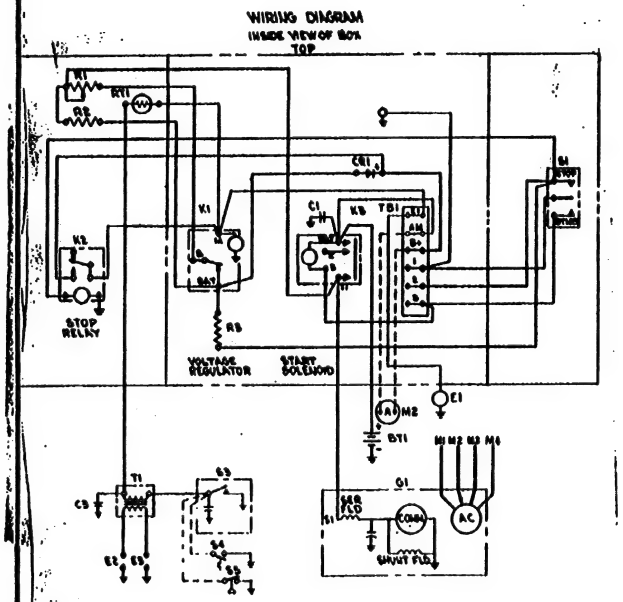

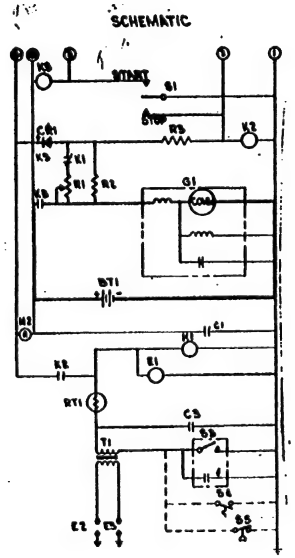

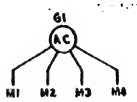

REF. NO.	PART NO.	QTY. USED	PART DESCRIPTION
C1	312A57	1	Capacitor, 1.0 MFD.
CR1	305B235	1	Diode, Reve rse Current
	305A254	1	Heat Sink
K1	305B383	1	Relay, 2-Step Voltage Reg.
K2	307B253	1	Relay, Stop
K3	307B845	1	Relay, Start Solenoid
R1	304A175	1	Resistor, 1-Ohm, 50 Watt, Adj.
R2	304A344	1	Resistor, 1-Ohm, 25 Watt
R3	304A251	1	Resistor, 30-Ohm, 5 Watt
RT1	304A60	1	Resistor, Hytemco, 1.72-Ohm, 25 Watt
S1	308P154	1	Switch, Start/Stop
Ⓒ TB1	332A699	1	Block, Terminal
	332A730	1	Strip, Marker
	301B3227	1	Bracket, Control Box Mtg.
	301D3294	1	Control Box
	301B3102	1	Cover
	332-142	1	Terminal
	508-1	3	Grommet
	517-19	1	Dot-Button
BT1		1	Battery, 12-Volt
C3	312A162	1	Capacitor, 0.1 MFD.
Ⓑ E1		1	Valve, Gas Solenoid
E2, 3		2	Spark Plug
G1		1	Generator
S3		1	Breaker & Cap Assembly
* S4	309A2	1	Switch, High Air Temp.
* S5	309A10	1	Switch, Low Oil Press.
T1		1	Ignition Coil (ONAN)
M2		1	Ammeter (Furnished by Customer)

* - When Used.

PLACE SILKSCREEN ON INSIDE OF COVER

RECONNECTION CHART

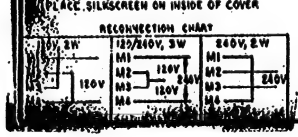

Ⓐ

3-18-70	COR.
WIRING DIAGRAM CONTROL - GEN. SET	
120/240V, 1PH, 2W	

611C1050

611C1052

WIRING DIAGRAM

INSIDE VIEW OF BOX

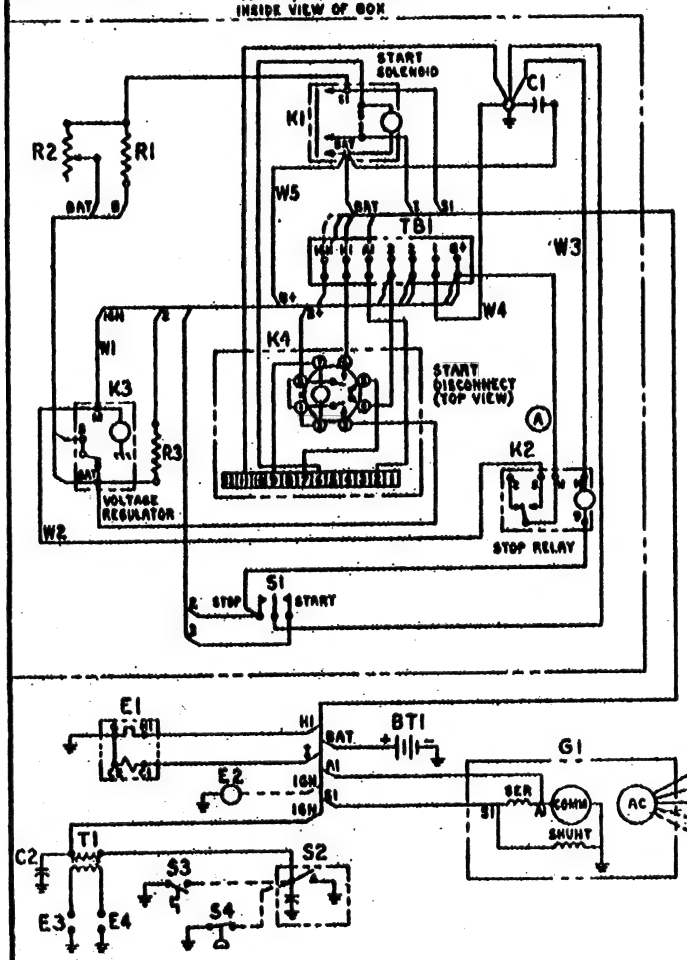

SCHEMATIC

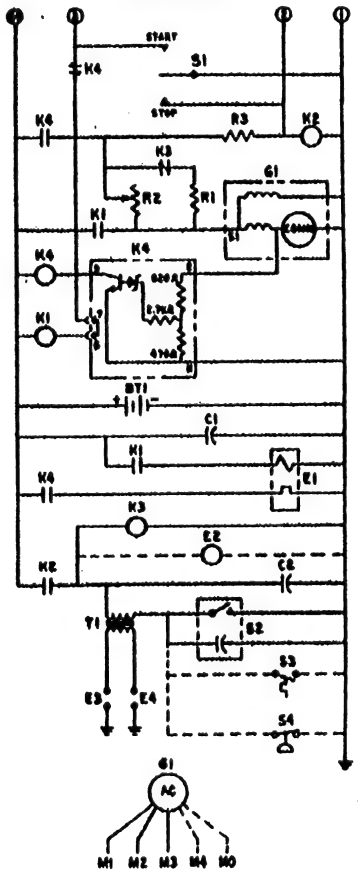

REF. DES.	PART NO.	QTY.	DESCRIPTION
			PARTS LIST
C1	312A185	1	CAPACITOR ASSY, 1.0 MFD
K1	307D945	1	RELAY-START SOLENOID
K2	307B1052	1	RELAY-STOP
K3	305B383	1	RELAY-2 STEP VOLTAGE REGULATOR
K4	306D232	1	RELAY ASSY-START DISC
	307D1070(REF)	1	RELAY-START DISCONNECT
*	300A734(REF)	1	AMPLIFIER-START DISCONNECT
	304A688	1	RESISTOR & LEAD ASSY
R1	353A6 (REF)	1	RESISTOR, 6Ω, 50 W
	304A689	1	RESISTOR & LEAD ASSY
R2	304A637(REF)	1	RESISTOR, 6Ω, 100 W ADJ
	304A685	1	RESISTOR & LEAD ASSY
R3	304A251(REF)	1	RESISTOR, 30Ω, 5 W
	308A290	1	SWITCH ASSY-
S1	308P154(REF)	1	SWITCH-START, STOP
TB1	332A745	1	TERMINAL BLOCK
	332A1321	1	MARKER STRIP
W1	336A2032	1	LEAD ASSY
W2	336A2030	1	LEAD ASSY
W3	336A2031	1	LEAD ASSY
W4	336A1431	1	LEAD ASSY
W5	336A2033	1	LEAD ASSY
	301D3351	1	CONTROL BOX
	301B3349	1	COVER-CONTROL BOX
	331-88	2	GROMMET
	508-4	1	GROMMET
	98A1876	1	SILKSCREEN-RECONNECTION
	98A2266	1	SILKSCREEN-START, STOP
	PARTS LIST ENG GEN (REF)		
BT1		1	BATTERY, 12V
C2		1	CAPACITOR, 0.1 MFD
E1		1	CHOKE-THERMO MAG
• E2		1	PUMP-FUEL
E3,4		2	SPARK PLUG
G1		1	GENERATOR
S2		1	BREAKER & CAP ASSY
• S3		1	SWITCH-HIGH AIR TEMP
• S4		1	SWITCH-LOW OIL PRESS
T1		1	COIL-IGNITION
D * E	323B805 (REF)	1	SOCKET ASSY - START DISC
	301A3306(REF)	1	SPRING

*WHEN USED

611C1052

PLACE SILKSCREEN ON INSIDE OF COVER RECONNECTION FOR 3C

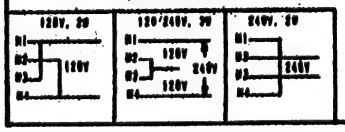

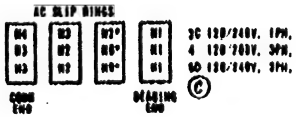

*GROUND AC LEAD, ALL STATORS HAVE 0.1 MFD CAPACITOR TO GROUND.

E	REM 301A3305 (REF) 2		
D	ADDED 3, H4 (REF) DWGS		
C	WAS 5		
B	WAS - H N CR		
A	ADDED WIRE FROM V&Z		
	SUPERS DWG SHEET NO.		

B

-01	MODEL NO. NH-H N R/6000A	8-24-70	CDR
	12V REMOTE		

CONTROL - GEN SET (WIRING DIAGRAM)

611C1052

611C1054

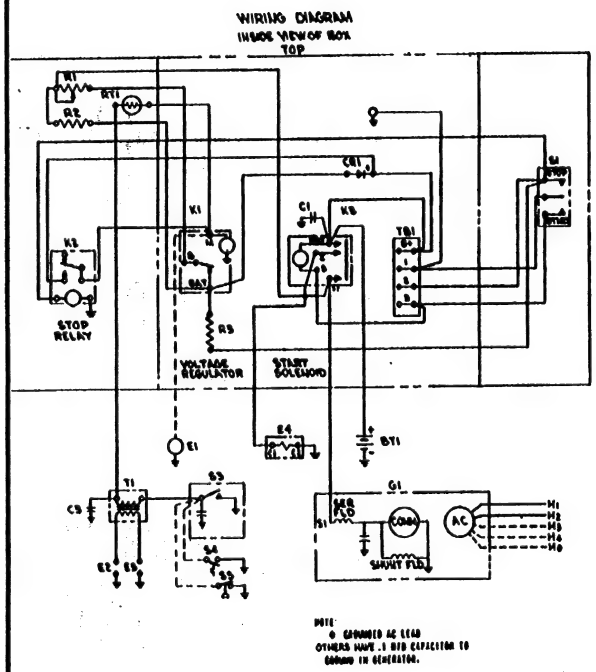

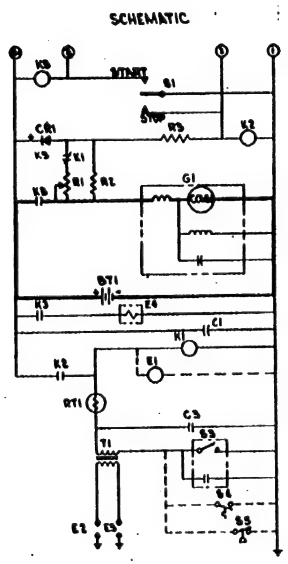

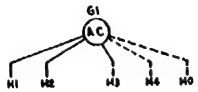

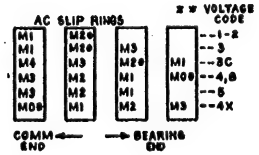

REF. NO.	PART NO.	QTY. USED	PART DESCRIPTION
C1	312A57	1	Capacitor 1.0 MFD.
CR1	305B235	1	Diode, Reverse Current
	305A254	1	Heat Sink
K1	305B383	1	Relay, 2-Step Voltage Reg.
K2	307B253	1	Relay, Stop
K3	307B845	1	Relay, Start Solenoid
R1	304A175	1	Resistor, 1-Ohm, 50 Watt, Adj.
R2	304A344	1	Resistor, 1-Ohm, 25 Watt
R3	304A251	1	Resistor, 30-Ohm, 5 Watt
RT1	304A60	1	Resistor, Hytemco, 1.72-Ohm, 25 Watt
S1	308P154	1	Switch, Start/Stop
TB1	332A537	1	Block, Terminal
	332A566	1	Strip, Marker
	301B3227	1	Bracket, Control Box Mtg.
	301D3228	1	Control Box
	301B3102	1	Cover
	508-1	3	Grommet
	517-19	1	Dot - Button
BT1		1	Battery, 12-Volt
C3	312A162	1	Capacitor 0.1 MFD.
*E1		1	Fuel Pump
E2, 3		2	Spark Plug
E4		1	Choke, Electric
G1		1	Generator
S3		1	Breaker & Cap Assembly
*S4	309A2	1	Switch, High Air Temp.
*S5	309A10	1	Switch, Low Oil Pressure
T1		1	Ignition Coil (ONAN)

* - When Used.

PLACE DIAGRAM ON INSIDE OF COVER

RECONNECTION FOR 3C

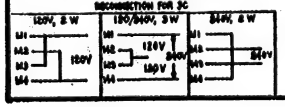

NOTE:
UNLESS OTHERWISE NOTED, ALL COMPONENTS ARE SHOWN IN THE DE-ENERGIZED POSITION.

5-13-70	COR		
WIRING DIAGRAM CONTROL - GEN SET			
611C1054			

611C1061

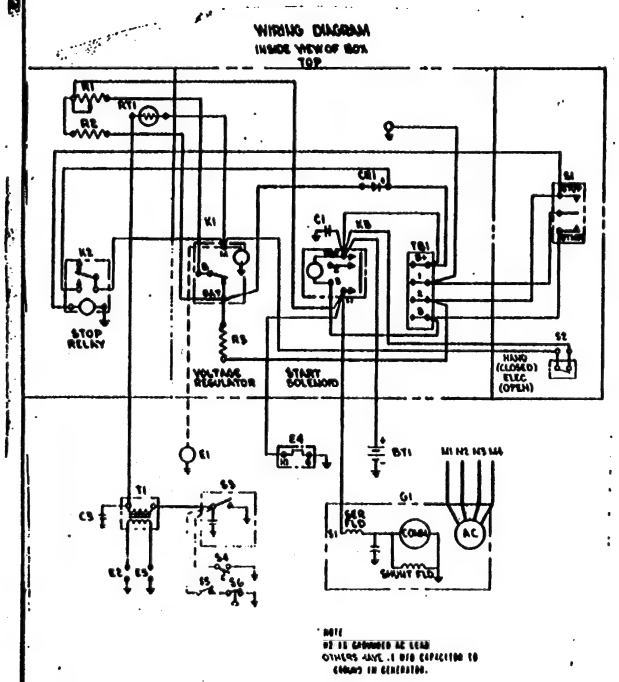

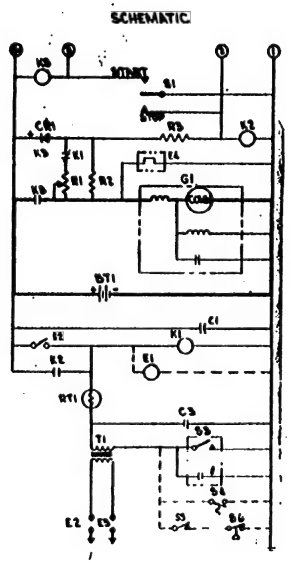

REF. NO.	PART NO.	QTY. USED	PART DESCRIPTION
C1	312A57	1	Capacitor 1.0 MFD.
CR1	305B235	1	Diode, Reverse Current
	305A254	1	Heat Sink
K1	305B383	1	Relay, 2-Step Voltage Reg.
K2	307B253	1	Relay, Stop
K3	307B845	1	Relay, Start Solenoid
R1	304A175	1	Resistor, 1-Ohm, 50 Watt, Adj.
R2	304A344	1	Resistor, 1-Ohm, 25 Watt
R3	304A251	1	Resistor, 30-Ohm, 5 Watt
RT1	304A60	1	Resistor, Hytemco, 1.72-Ohm, 25 Watt
S1	308P154	1	Switch, Start/Stop
S2	308P2	1	Switch, Hand/Elect. Start
TB1	332A537	1	Block, Terminal
	332A566	1	Strip, Marker
	301B3227	1	Bracket, Control Box Mtg.
	301D3228	1	Control Box
	301B3102	1	Cover
	508-1	3	Grommet
BT1		1	Battery, 12-Volt
C3	312A162	1	Capacitor 0.1 MFD.
*E1		1	Fuel Pump
E2, 3		2	Spark Plug
E4		1	Choke, Electric
G1		1	Generator
S3		1	Breaker & Cap Assembly
*S4	309A2	1	Switch, High Air Temp.
*S5	308-97	1	Switch
*S6	309A10	1	Switch, Low Oil Pressure
T1		1	Ignition Coil (ONAN)

* - When Used.

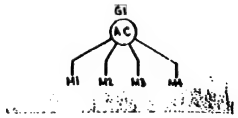

PLACE SILKSCREEN ON INSIDE OF COVER

RECONNECTION CHART

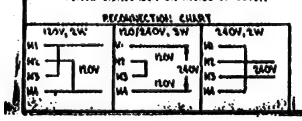

NOTE:
UNLESS OTHERWISE NOTED ALL COMPONENTS ARE SHOWN IN THE DE-ENERGIZED POSITION

01	S.OLCK SCR/94033	6-9-70	CONTROL-GEN SET (WIRING DIAGRAM)
	120V 2W 1PH 60CY		611C1061

611C1067

WIRING DIAGRAM

INSIDE VIEW OF BOX
TOP

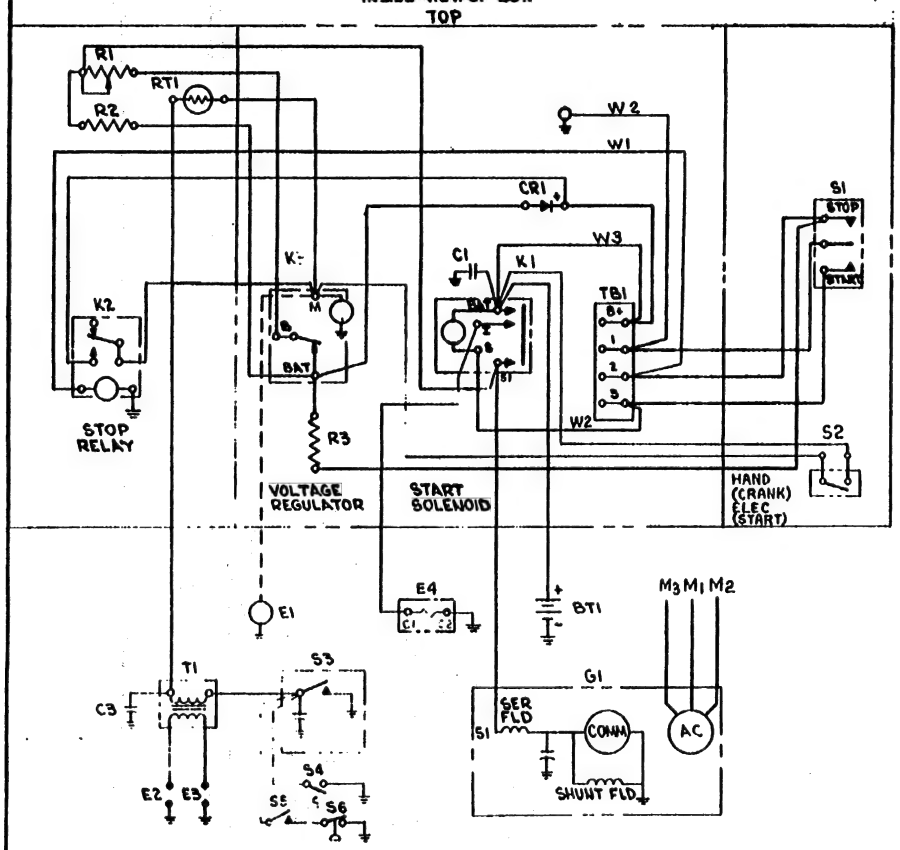

NOTE:
M2 IS GROUNDED AC LEAD
M1 & M3 HAVE .1 MFD CAPACITOR TO GROUND IN GENERATOR.

SCHEMATIC

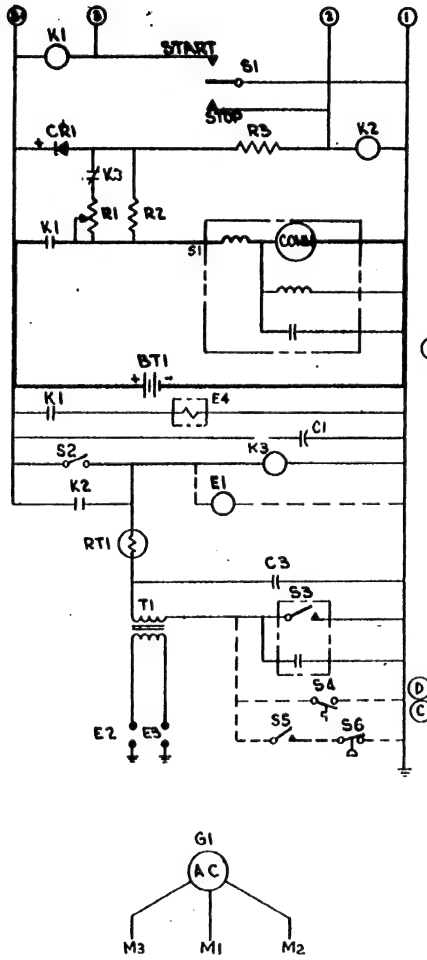

PARTS LIST

REF. DES.	PART NO.	QTY.	DESCRIPTION
C1	312A105	1	CAPACITOR ASSY
	305A494	1	DIODE ASSY
CR1	305B235(REF)	1	DIODE-REVERSE CURRENT
	305A254(REF)	1	HEAT SINK
K1	307B845	1	RELAY-START SOLENOID
	307A1120	1	RELAY & LEAD ASSY-STOP
K2	307B253(REF)	1	RELAY-STOP
K3	305B383	1	RELAY-2 STEP VOLTAGE
	304A881	1	RESISTOR ASSY
R1	304A175(REF)	1	RESISTOR-ADJ. 1 OHM. 50 W
R2	304A344(REF)	1	RESISTOR-FIXED 1 OHM. 25 W
	304A880	1	RESISTOR & LEAD ASSY
RT1	304A80 (REF)	1	RESISTOR 1.72 OHM. 25 W
	308A284	1	SWITCH ASSY-MNT START
S1	308P154(REF)	1	SWITCH-START/STOP
R3	304A251(REF)	1	RESISTOR 30 OHM. 5 W
TB1	332A537	1	TERMINAL BLOCK
	332A566	1	MARKER STRIP
W1	330A2024	1	LEAD ASSY 18
W2	330A1045	2	LEAD ASSY 8
W3	330A2023	1	LEAD ASSY 12
	308A300	1	SWITCH & LEAD ASSY (-02 ONLY)
S2	306P2 (REF)	1	SWITCH (HAND/ELECT START)(-02 ONLY)
	301B3227	1	BRACKET-CONT BOX MTG
	301B3228	1	CONTROL BOX
	301B3102	1	COVER
	98A2117	1	SILKSCREEN
	508-1	3	GROMMET
	517-19	1	DOT BUTTON (-01 ONLY)
	PARTS LIST (ENG-GEN)(REF)		
BT1		1	BATTERY-12 VOLT
C3	312A102	1	CAPACITOR 0.1 MFD
E1		1	FUEL PUMP
E2,3		2	SPARK PLUG
E4		1	CHOKE-SISSON
G1		1	GENERATOR
S3		1	BREAKER & CAP ASSEMBLY
S4	309A2	1	SWITCH-HIGH AIR TEMP
S5		1	SWITCH-MOMENTARY
S6	309A10	1	SWITCH-LOW OIL PRESS
T1		1	IGNITION COIL (OHAN)

+ WHEN USED

L30101 9

NOTE:
UNLESS OTHERWISE NOTED. ALL COMPONENTS ARE SHOWN IN THE DE-ENERGIZED POSITION

E	-02	4.0CCK-3R/6000P 5.0CCK-3R/6000P
	-01	MODEL NO 4.0CCK-3R/9381N 5.0CCK-3R/9381N
		120/240V, 3W. 1PH. 60CY

REV	DESCRIPTION
E	ADDED 2 MODELS
D	ADDED 75
C	ADD SS
B	ADDED S2, 3, 330
A	GENERAL REV 01

Onan

DATE 7-14-70 | CIP

CONTROL-GEN SET (WIRING DIAGRAM)

DWG NO 611C1067

611C1076

WIRING DIAGRAM
INSIDE VIEW OF BOX

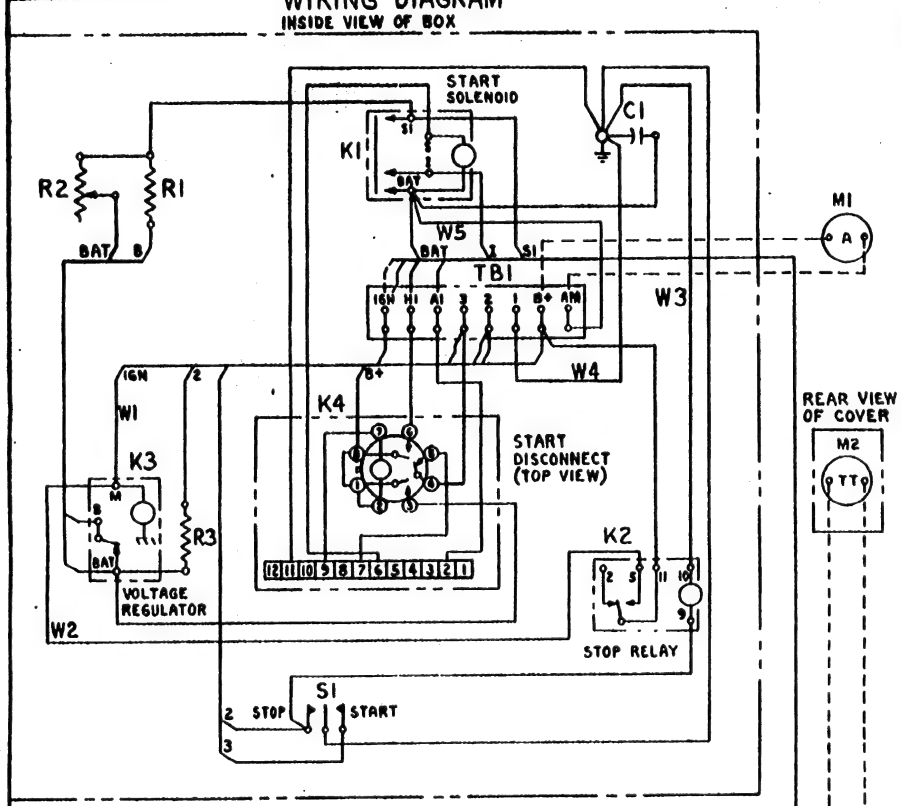

SCHEMATIC

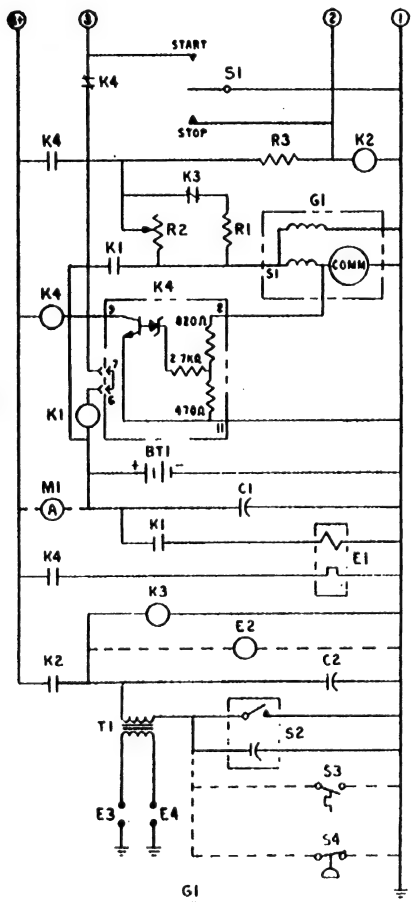

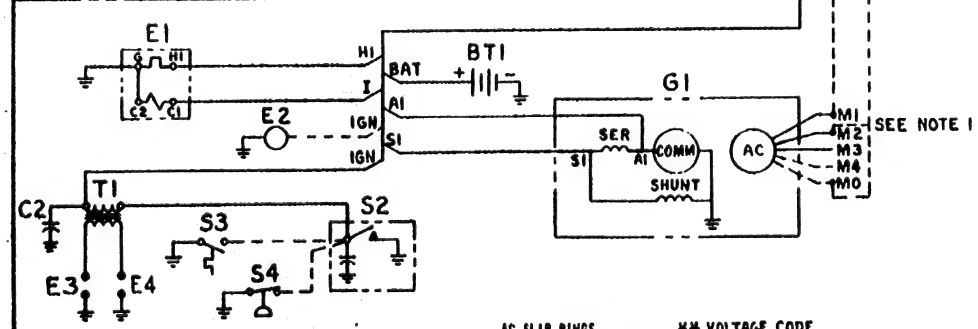

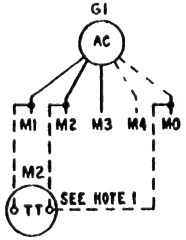

REF DES	PART NO	QTY	DESCRIPTION
C1	312A185	1	CAPACITOR ASSY, 1.0 MFD
K1	307B845	1	RELAY-START SOLENOID
K2	307B1052	1	RELAY-STOP
K3	305B363	1	RELAY-2 STEP VOLTAGE REGULATOR
K4	306B232	1	RELAY ASSY-START DISC
	307B1070(REF)	1	RELAY-START DISCONNECT
**	309A734(REF)	1	AMPLIFIER-START DISCONNECT
M2	302P787	1	METER-RUNNING TIME
	304A688	1	RESISTOR & LEAD ASSY
R1	353A6 (REF)	1	RESISTOR, 6Ω, 50 W
	304A689	1	RESISTOR & LEAD ASSY
R2	304A632(REF)	1	RESISTOR, 6Ω, 100 W ADJ
	304A685	1	RESISTOR & LEAD ASSY
R3	304A251(REF)	1	RESISTOR, 30Ω, 5 W
	323B805(REF)	1	SOCKET ASSY-START DISC
** (A)	301A3306(REF)	1	SPRING
	308A296	1	SWITCH ASSY
S1	308P154(REF)	1	SWITCH-START, STOP
TBI	332A706	1	TERMINAL BLOCK
	332A707	1	MARKER STRIP
W1	336A2032	1	LEAD ASSY
W2	336A2030	1	LEAD ASSY
W3	336A2031	1	LEAD ASSY
W4	336A1431	1	LEAD ASSY
W5	336A2033	1	LEAD ASSY
	301D3372	1	CONTROL BOX
	301B337C	1	COVER-CONTROL BOX
	331-88	2	GROMMET
	508-4	1	GROMMET
	98A1876	1	SILKSCREEN RECONNECTION
	98A2266	1	SILKSCREEN-START STOP
M1		1	AMMETER-CHARGE (FURN BY CUST)
	PARTS LIST ENG GEN (REF)		
BTI		1	BATTERY, 12V
C2		1	CAPACITOR 0.1 MFD
E1		1	CHOKE-THERMO MAG
E2		1	PUMP FUEL
E3,4		2	SPARK PLUG
G1		1	GENERATOR
S2		1	BREAKER & CAP ASSY
* S3		1	SWITCH-HIGH AIR TEMP
* S4		1	SWITCH-LOW OIL PRESS
T1		1	COIL-IGNITION

*WHEN USED

PLACE SILKSCREEN ON INSIDE OF COVER
RECONNECTION FOR 3C

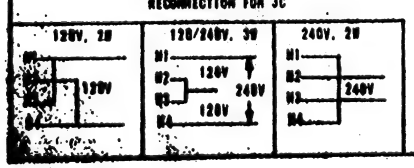

AC SLIP RINGS

COMM END			BEARING END
M4	M3	M2*	M1
M3	M2	MO*	M1
M3	M2	MO*	M1

** VOLTAGE CODE
3C 120/240V. 1PH.
4 120/208V. 3PH.
5D 120/240V. 3PH.

*GROUND AC LEAD, ALL OTHERS HAVE 0.1 MFD CAPACITOR TO GROUND.

NOTE:
1. CONNECT RUNNING TIME METER TO LEADS M1 & M2 FOR A 3CR GEN, & TO LEADS M1 & MO FOR A 4 OR 5D GEN

A	ADDED 2, K4 (REF) DWGS	G.F.	10-13-71
-01	NH-**B/10250A	11-11-70 CDR	CONTROL-GEN SET (WIRING DIAGRAM)
	12V REMOTE		611C1076
			HUNTSVILLE

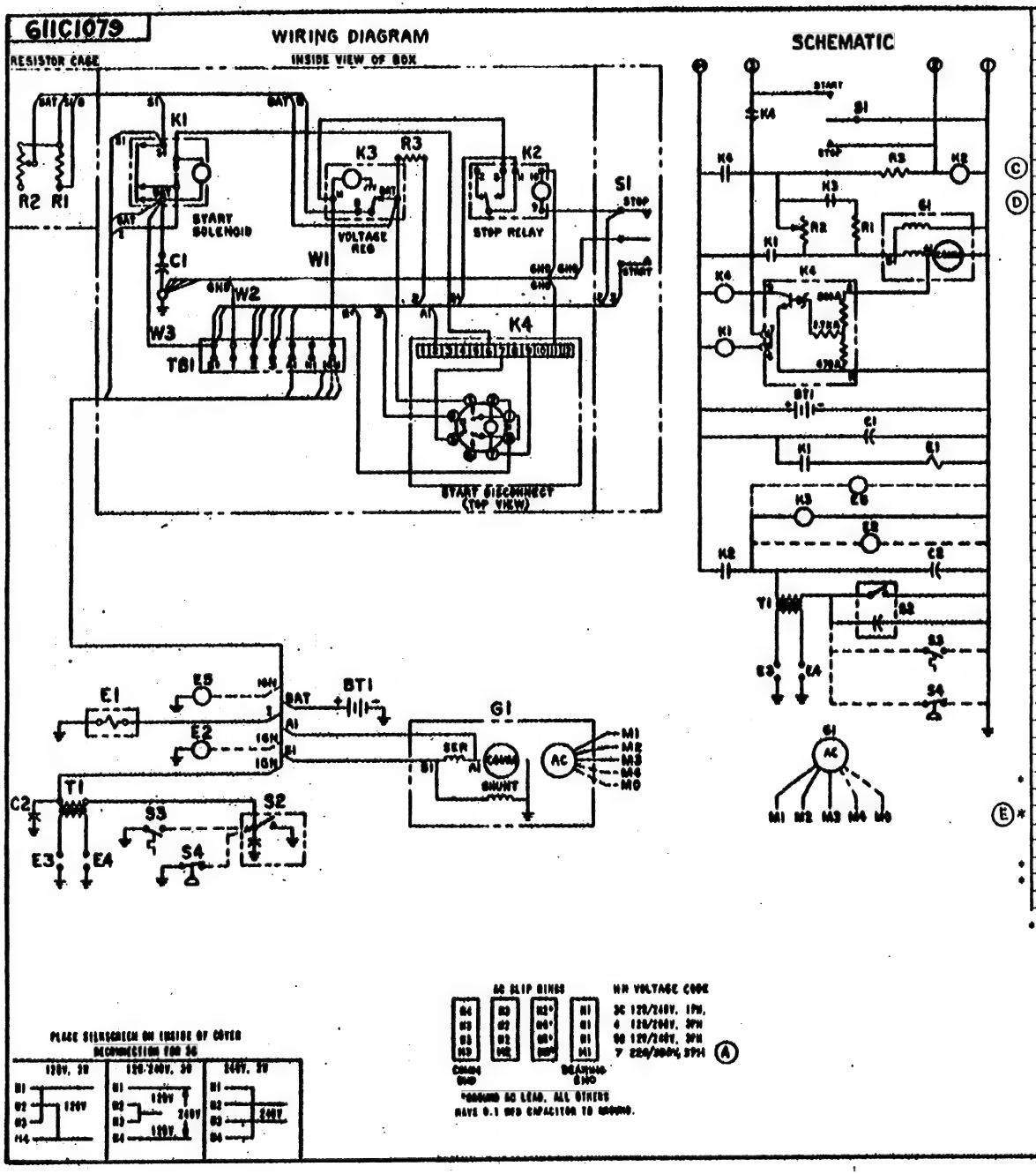

PARTS LIST

REF. DES.	PART NO.	QTY.	DESCRIPTION
	312A185	1	CAPACITOR ASSY
C1	312A97(REF)	1	CAPACITOR, 1.0 MFD
K1	307B045	1	RELAY-START SOLENOID
	307A1145	1	RELAY & LEAD ASSY
K2	307B1052(REF)	1	RELAY-STOP
K3	305D303	1	RELAY-2 STEP VOLTAGE REGULATOR
K4	306D243	1	RELAY ASSY - START DISC
	300A734(REF)	1	AMPLIFIER-START DISCONNECT
	323B818(REF)	1	SOCKET ASSY-START DISC
	307B1070(REF)	1	RELAY-START DISCONNECT
	301A3306(REF)	1	SPRING
(R1,R2)	301D3409	1	RESISTOR & BOX ASSY
R1	353A6(REF)	1	RESISTOR, 6Ω, 50 W
R2	304A632(REF)	1	RESISTOR, 6Ω, 100 W ADJ
	304A685	1	RESISTOR & LEAD ASSY
R3	304A251(REF)	1	RESISTOR, 30Ω, 5 W
	308A313	1	SWITCH ASSY-START, STOP
S1	308A154(REF)	1	SWITCH-START, STOP
TB1	332A745	1	BLOCK-TERMINAL
	332A1412	1	STRIP-MARKER
W1	336A1431	1	LEAD ASSY 6"
W2	336A2032	1	LEAD ASSY 3"
W3	336A2033	1	LEAD ASSY 6"
	301C3404	1	CONTROL BOX
	301B3405	1	COVER-CONTROL BOX
	331-88	2	GROMMET
	508-4	1	GROMMET
	98A1876	1	SILKSCREEN-RECONNECTION
	98A2322	1	SILKSCREEN-START, STOP
			61IC1079
PARTS LIST ENG GEN (REF)			
BT1		1	BATTERY, 12V
C2		1	CAPACITOR, 0.1 MFD
E1		1	CHOKE-SISSON
* E2		1	PUMP-FUEL
E3,4		2	SPARK PLUG
(E)* E5		1	SOLENOID-FUEL
G1		1	GENERATOR
S2		1	BREAKER & CAP ASSY
* S3		1	SWITCH-HIGH AIR TEMP
* S4		1	SWITCH-LOW OIL PRESS
T1		1	COIL-IGNITION

*WHEN USED

(C)	ADDED E5
(D)	ADJ'D (REF) TO K4 DWGS
	K3 WAS 307B1070
	ADDED MODEL NO. 5.5 NH
	ADDED VOLTAGE

(B)

	5.5 NH-SNKR/6000C	
-01	6.5 NH-KNR/6000C	
	12 V REMOTE 4 W, 50-60 Hz	

3-12-71 CDR JWD

CONTROL - GEN SET (WIRING DIAGRAM)

61IC1079

611C1080

WIRING DIAGRAM
INSIDE VIEW OF BOX

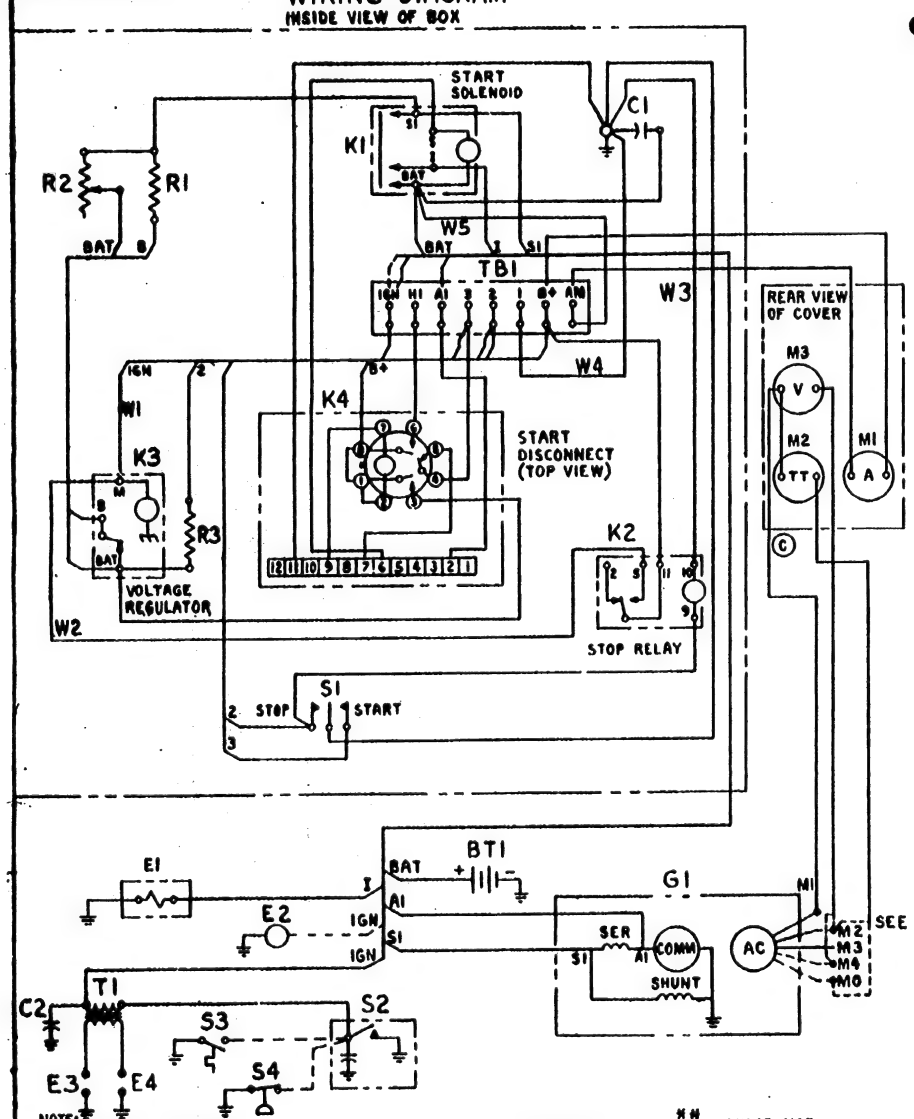

SCHEMATIC

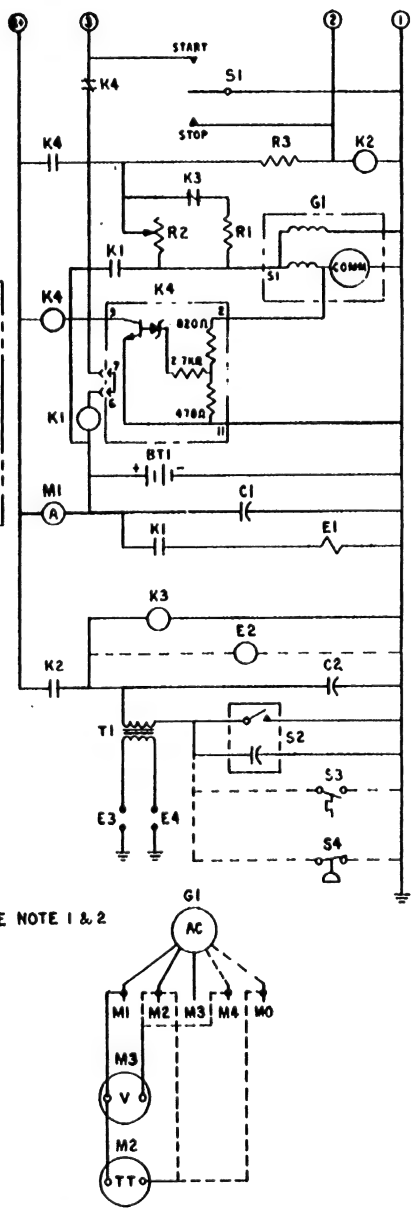

REF DES	PART NO	QTY	DESCRIPTION
C1	312A185	1	CAPACITOR ASSY, 1.0 MFD
K1	3078845	1	RELAY-START SOLENOID
K2	30781052	1	RELAY-STOP
K3	3058383	1	RELAY-2 STEP VOLTAGE REGULATOR
K4	3088232	1	RELAY ASSY-START DISC
	30781070(REF)	1	RELAY START DISCONNECT
****	309A736(REF)	1	AMPLIFIER-START DISCONNECT
** M2	302P787	1	METER-RUNNING TIME
***	304A888	1	RESISTOR & LEAD ASSY
R1	353A6 (REF)	1	RESISTOR, 60 50 W
	304A889	1	RESISTOR & LEAD ASSY
R2	304A832(REF)	1	RESISTOR 60 100 W ADJ
	304A885	1	RESISTOR & LEAD ASSY
R3	304A251(REF)	1	RESISTOR, 300, 5 W
****	323B405(REF)	1	SOCKET ASSY - START DISC
(B)	323A3306(REF)	1	SPRING
	309A296	1	SWITCH ASSY
S1	309P154(REF)	1	SWITCH-START STOP
TB1	332A706	1	TERMINAL BLOCK
	332A707	1	MARKER STRIP
W1	336A2032	1	LEAD ASSY
W2	336A2030	1	LEAD ASSY
W3	336A2031	1	LEAD ASSY
W4	336A1431	1	LEAD ASSY
W5	336A2033	1	LEAD ASSY
	30103372	1	CONTROL BOX
	30103414	1	COVER-CONTROL BOX
	331-88	2	GROMMET
	508-4	1	GROMMET
	98A1876	1	SILKSCREEN RECONNECTION
	98A2266	1	SILKSCREEN-START STOP
** M1	302A58	1	AMMETER-CHARGE, 10-0-10
*** M3	302P551	1	VOLTMETER-AC, 0-300V
	PARTS LIST ENG GEN (REF)		
BTI		1	BATTERY, 12V
C2		1	CAPACITOR, 0.1 MFD
E1		1	CHOKE-SISSON
E2		1	PUMP-FUEL
E3,4		2	SPARK PLUG
G1		1	GENERATOR
S2		1	BREAKER & CAP ASSY
S3		1	SWITCH-HIGH AIR TEMP
S4		1	SWITCH-LOW OIL PRESS
T1		1	COIL-IGNITION

*WHEN USED

NOTE:
1. CONNECT RUNNING TIME METER TO LEADS M1 & M2 FOR A 3CR GEN & TO LEADS M1 & MO FOR A 5DR GEN
2. CONNECT VOLTMETER TO LEADS M1 & M4 FOR A 3CR GEN & TO LEADS M1 & M2 FOR A 5DR GEN

D	WAS "120V"	G.T.	11-5-71
C	MOVED WIRE FROM M2 TO M3	G.T.	11-5-71
B	ADDED 2, K4 (REF) DWGS	G.T.	10-15-71
A	ADD 3CR GEN & CONNECTIONS	J.F.	7-13-71

Onan

-01	6.5NH-**R/10760C	12V REMOTE	

DATE 4-26-71 DR. CDR

NAME CONTROL - GEN SET (WIRING DIAGRAM)

DWG. NO. 611C1080

HUNTSVILLE

61IC1086

WIRING DIAGRAM

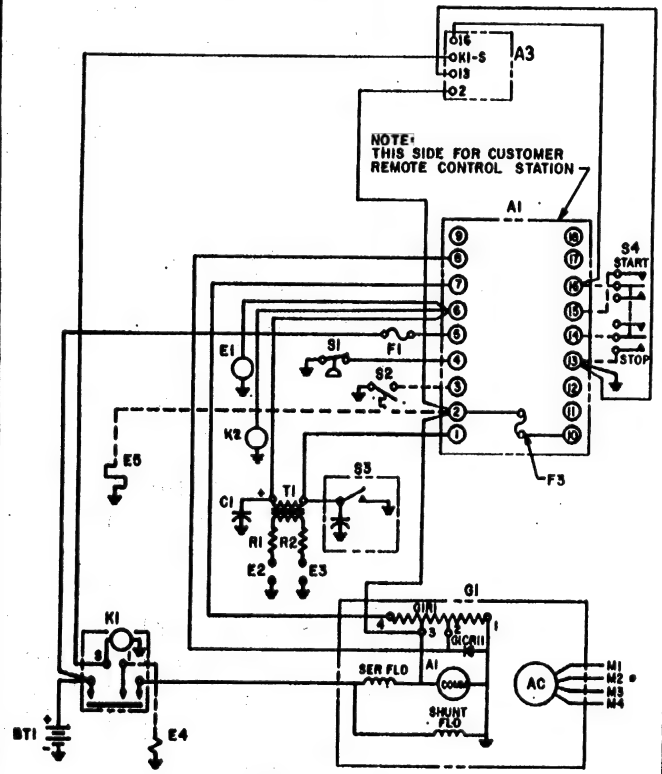

SCHEMATIC

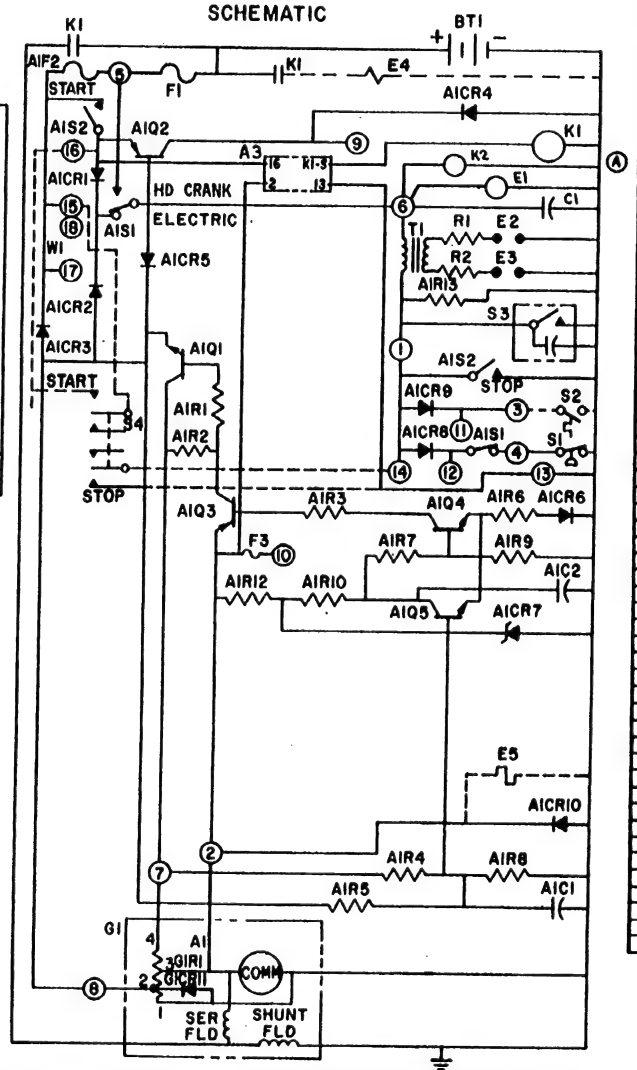

Ⓑ

AC SLIP RINGS

COMM END			BEARING END
M4	M3	M2*	M1
M3	M2	M0**	M1
M3	M2	M0**	M1
M3	M2	M0**	M1
M3	M2	M0**	M1

** VOLTAGE CODE

3C	120/240V, 1PH
4	120/208V, 3PH
5D	120/240V, 3PH
7	220/380V, 3PH
4X	277/480V, 3PH
7X	240/416V, 3PH

RECONNECTION CHART

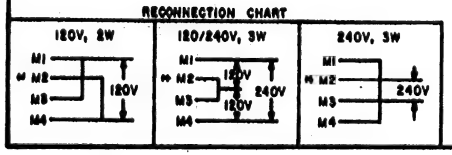

* GROUNDED AC LEAD

DASH NO	CHOKE	MODEL	WIRING HARNESS	CONTROL ASSY
-01	SISSON CHOKE	CCK,NH	338D640	300D1000
-02	ONAN CHOKE	CCK	338D691	300D1000
-03	NO CHOKE GAS CARB	CCK,NH	338D0774	300D1108
-04	NO CHOKE HATKO GAS	CCK,NH	338D0775	300D1108
-05	SISSON CHOKE HATKO	CCK,NH	338D0778	300D1000

PARTS LIST

REF. DES.	PART NO.	QTY.	DESCRIPTION
	SEE TAB	1	CONTROL ASSY
A1	300C859(REF)	1	CONTROL-GEN SET ASSY
A2	300D935(REF)	1	CONTROL-START ADAPTER (4 TO 3 WIRE)
S4		1	SWITCH-START STOP (CUSTOMER REMOTE)
W1	SEE TAB	1	WIRING HARNESS
F3	321A210	1	HOLDER ASSY-FUSE
	381P194 (REF)	1	FUSE
A3	300D1227(REF)	1	CONTROL-DISC ADPTR
		PARTS	LIST ENG GEN (REF)
BT1		1	BATTERY-12 VDC
C1		1	CAPACITOR-0.1 MFD
E1		1	PUMP-FUEL (WHEN USED)
E2,E3		2	SPARK PLUG
E4		1	CHOKE-SISSON (WHEN USED)
E5		1	CHOKE-ONAN (WHEN USED)
G1		1	GENERATOR
G1CR11	357-17	1	DIODE-3A
G1R1	359-47	1	RESISTOR
K1	387D1188	1	RELAY-START SOLENOID
F1	321P165	1	HOLDER ASSY-FUSE
K2		1	SOLENOID-FUEL
R1	187D1557	1	LEAD ASSY-HI TENSION
R2	187D1528	1	LEAD ASSY-HI TENSION
RT1	304-80	1	RESISTOR-HYTEMCO 1.72Ω, 28W
S1		1	SWITCH-LOW OIL PRESS
S2		1	SWITCH-HIGH AIR TEMP (WHEN USED)
S3		1	BREAKER & CAP ASSY
S4		1	SWITCH-REMOTE START STOP
T1		1	COIL-IGNITION

61IC1086

B	ADDED AC SLIP RING CHART		
A	ADDED A3		
SUPERSEDES DWG SAME NO DATED 2-15-73			
LTR	REVISION	CHK	DATE

Onan DIVISION OF STUDEBAKER CORPORATION Minneapolis, Minnesota

DATE 2-12-75 BY CDR CHKD. WMH REV. B

NAME CONTROL-GEN SET WIRING DIAGRAM

DWG. NO. 61IC1086

5.5NH-*NR/12000D
3584 2CCK-*NR/12000R
120/240V., 1PH 4W., 50Hz

6.5NH-*NR/12000D
4 6.5CCK-*NR/12000R
120/240V., 1 PH 4W., 60Hz

61IC1094

WIRING DIAGRAM

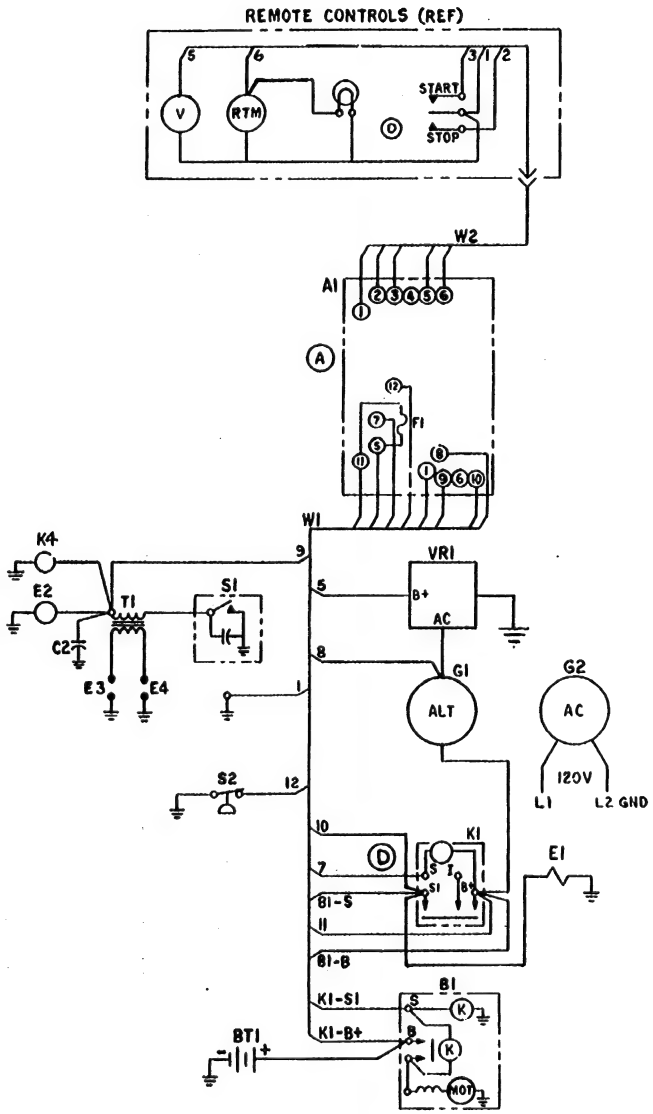

SCHEMATIC

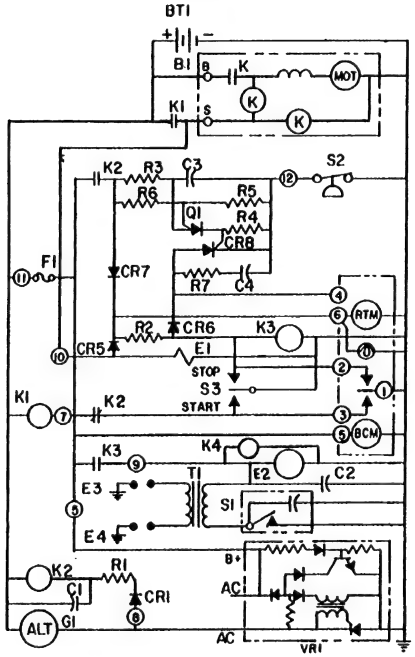

NOTE:
1. MIN START DISCONNECT= 675 RPM.

PARTS LIST

REF. DES.	PART NO.	QTY.	DESCRIPTION
	300C845	1	CONTROL ASSY-GEN SET
A1		1	CONTROL-HOT HOME
B1		1	STARTER-SOLENOID SHIFT
BT1		1	BATTERY-12 VOLT
C2		1	CAPACITOR
E1		1	CHOKE
E2		1	FUEL PUMP
E3,4		2	SPARK PLUG
G1		1	ALTERNATOR
G2		1	GENERATOR
K1		1	SOLENOID-START
S1		1	BREAKER & CAP ASSY
S2		1	SWITCH-LOW OIL PRESS
(C) K4		1	SOLENOID - FUEL
T1		1	COIL-IGNITION
VR1		1	VOLTAGE REGULATOR
W1		1	WIRING HARNESS-GEN SET
W2		1	WIRING HARNESS-REMOTE

61IC1094

LET	REVISION	CKD	ENGR	DATE
D	WAS K1-I, TO K1-S1	VB	WJH	10-13-75
C	WAS K2		HPM	7-30-73
D	REVISED CIRCUIT		HPM	6-19-73
C	ADD FUEL SOLENOID		HPM	6-19-73
B	NEW SCHEMATIC		WJH	2-26-73
A	REVISED A1 IN W.D. & SCHEM		RDH	10-13-72
A	REVISED A1 IN W.D. & SCHEM		WJH	7-5-72

Onan DIVISION OF STUDEBAKER CORPORATION Minneapolis, Minnesota

MODEL NO.	DATE 7-7-72	DR. CDR	TRACE HPM	CKD. WJB
-01 4.0BF-IR/9000 6.0NH-IR/9000	NAME CONTROL - GEN SET (WIRING DIAGRAM)		
120V, 1 PH, 3W, 60 Hz	DWG NO. 61IC1094		

611-1106 C

WIRING DIAGRAM

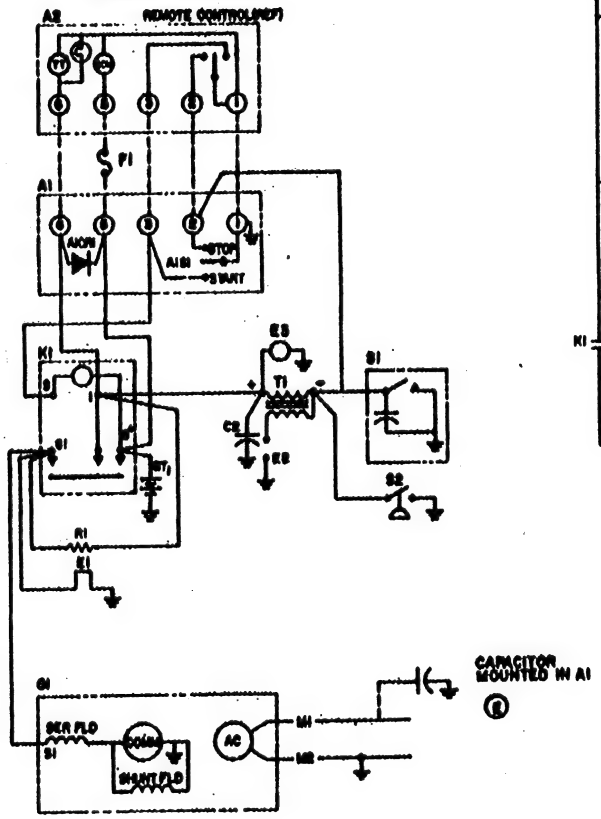

SCHEMATIC

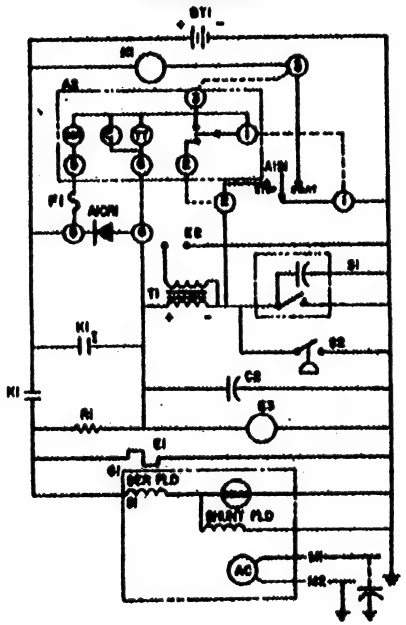

NOTE:
1. FUSE (5 AMP) TO BE SUPPLIED BY CUSTOMER TO PROTECT AGAINST ACCIDENTAL GROUNDING

PARTS LIST

REF. DES.	PART NO.	QTY.	DESCRIPTION
A1	300C1035	1	CONTROL ASSY-GEN SET
A1CR1	357-0022	1	DIODE ASSY (REF)
A1S1	308-0345	1	SWITCH-TOGGLE (REF)
A2	300-0986	1	REMOTE CONTROL (REF)
BT1		1	BATTERY-12V
C2		1	CAPACITOR
E1		1	CHOKE-ONAN
E2		1	SPARK PLUG
E3	307A1303	1	SOLENOID-FUEL (REF)
G1		1	GENERATOR
K1		1	SOLENOID-START
R1	353B0050	1	RESISTOR ASSY (REF) 10 ± 5% OHMS 45W
S1		1	BREAKER & CAP ASSY
S2	309P0237	1	SWITCH-LOW OIL PRESS (REF)
T1		1	COIL-IGNITION
F1	SEE NOTE 1		

-01	2.7AJ-1R/12020K	CONTROL-GEN SET (WIRING DIAGRAM)
		611-1106 C

611-1109

WIRING DIAGRAM

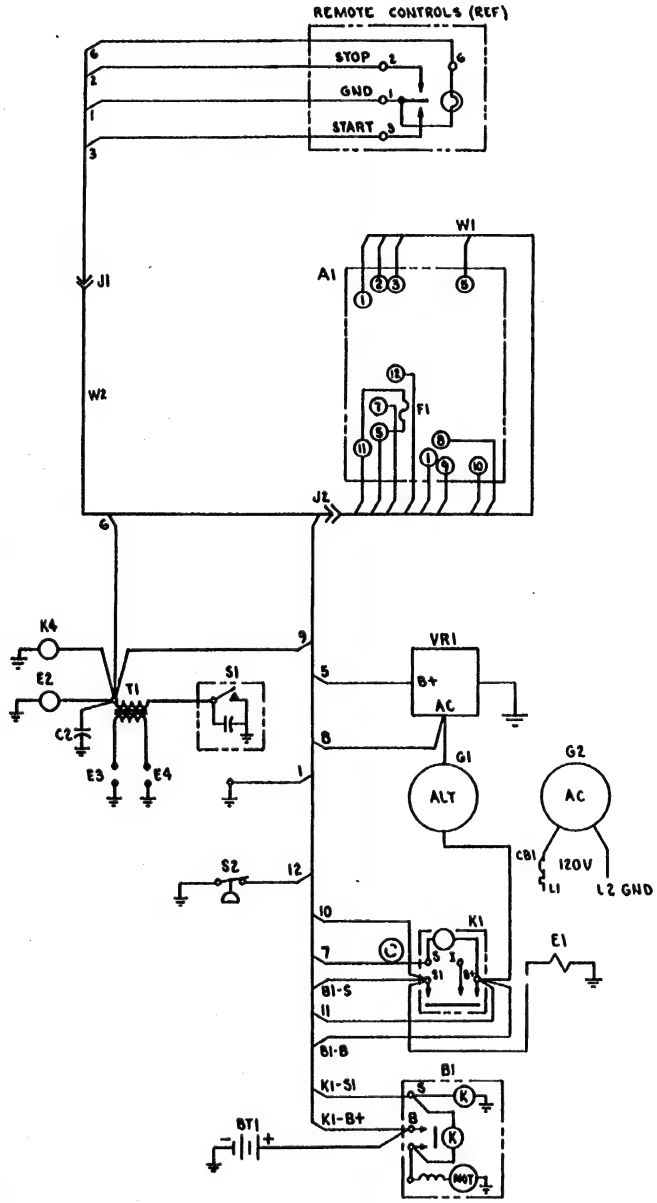

SCHEMATIC

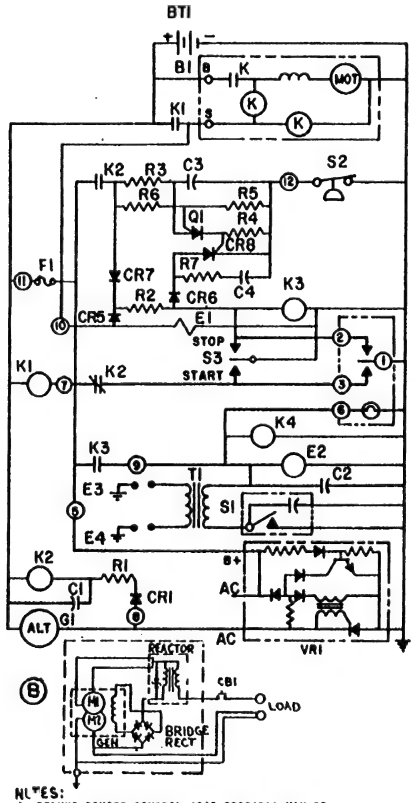

NOTES:

1. DELUXE REMOTE CONTROL (300-0986(B)) MAY BE USED IF AN ADDITIONAL WIRE, FROM TERMINAL 5 OF J2 TO TERMINAL 5 OF DELUXE REMOTE CONTROL, IS ADDED.
2. ON 4.0 BF-1R/9500 AND 6.0 NH-1R/9500 J1 IS ELIMINATED AND THE ADDITIONAL WIRE FOR THE DELUXE REMOTE CONTROLS IS PROVIDED.
3. MIN START DISCONNECT = 675 RPM

PARTS LIST

REF. DES.	PART NO.	DWG SIZE	QTY	DESCRIPTION
	300-1075	C	1	CONTROL ASSY-GEN SET
A1			1	CONTROL-MOT HOME
B1			1	STARTER-SOLENOID SHIFT
BT1			1	BATTERY-12 VOLT
C2			1	CAPACITOR
E1			1	CHOKE
E2			1	FUEL PUMP
E3,4			2	SPARK PLUG
G1			1	ALTERNATOR
G2			1	GENERATOR
K1			1	SOLENOID-START
K4			1	SOLENOID-FUEL
S1			1	BREAKER & CAP ASSY
S2			1	SWITCH-LOW OIL PRESS
T1			1	COIL-IGNITION
VR1			1	VOLTAGE REGULATOR
W1			1	WIRING HARNESS-GEN SET
W2			1	WIRING HARNESS-REMOTE
J1			1	CONNECTOR 4 CKT
J2			1	CONNECTOR 12 CKT
(A) CB1			1	CIRCUIT BREAKER (40A 4BF) (50A 6NH)

6011-119

LET	REVISION	CHK	DATE
C	WAS K1-I, TO K1-S1	KORN	8-27-75
B	ADDED AC TO SCHEMATIC	G.H.	1-8-75
A	CB1 ADDED		8-1-74

Onan — DIVISION OF STUDEBAKER CORPORATION, Minneapolis, Minnesota

DATE 9-14-73	CK. EE	ENGR.	APP.
NAME CONTROL-GEN SET (WIRING DIAGRAM)			
DWG. NO. 611-1109			DWG SIZE C

MODEL NO	
-01	4.0 BF-1R/9000 6.0 NH-1R/9000
120V, 1PH., 3W., 60 Hz	

611-1121

WIRING DIAGRAM

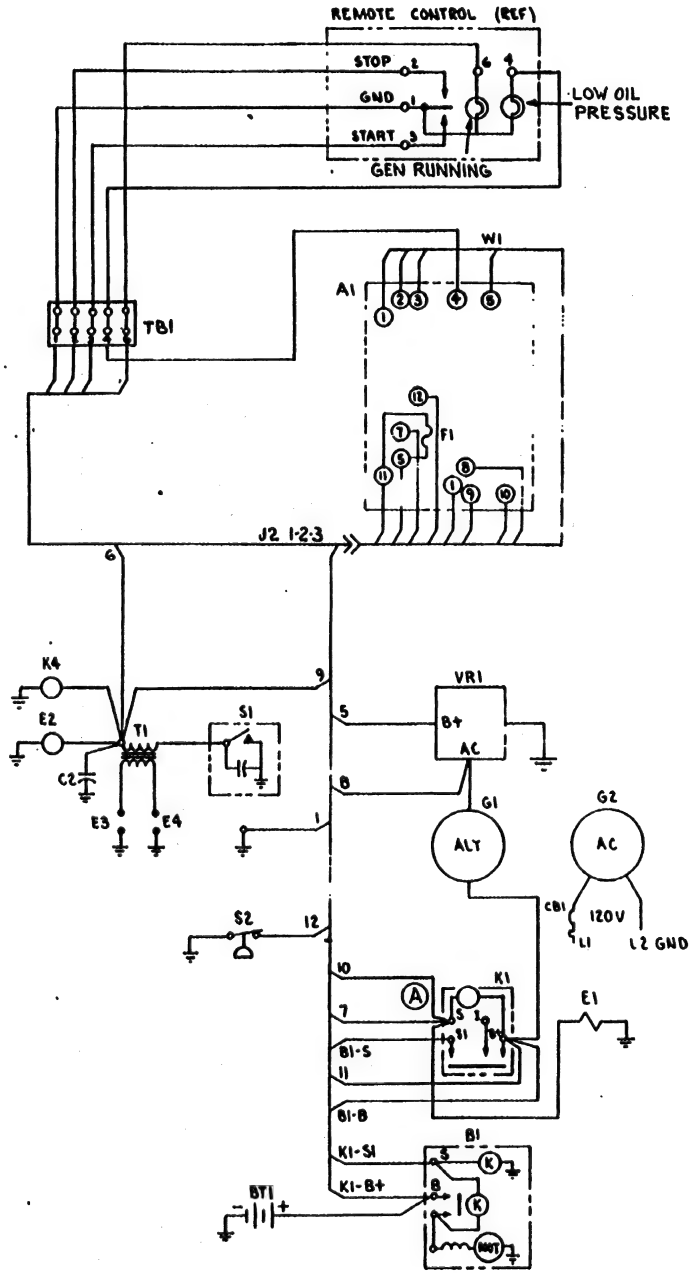

SCHEMATIC

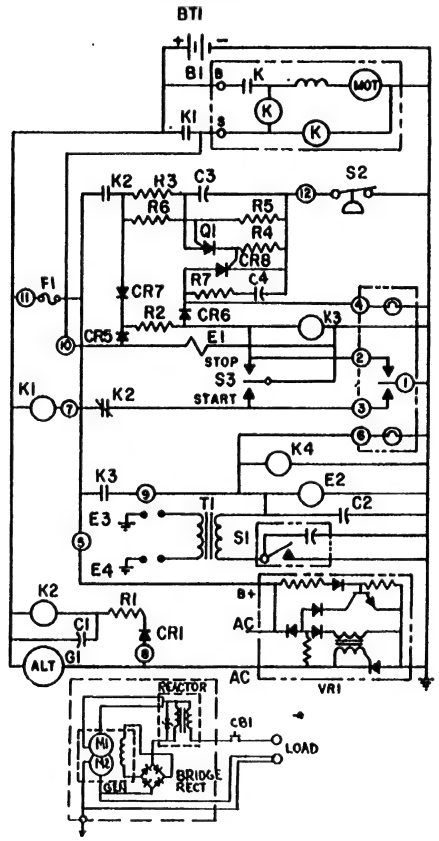

NOTE:
1. MIN START DISCONNECT = 675 RPM

REF. DES.	PART NO.	REV LTR	QTY	DESCRIPTION
	300-1075	C	1	CONTROL ASSY-GEN SET
A1			1	CONTROL-NOT HOME
B1			1	STARTER-SOLENOID SHIFT
BT1			1	BATTERY-12 VOLT
C2			1	CAPACITOR
E1			1	CHOKE
E2			1	FUEL PUMP
E3 4			2	SPARK PLUG
G1			1	ALTERNATOR
G2			1	GENERATOR
K1			1	SOLENOID-START
K4			1	SOLENOID-FUEL
S1			1	BREAKER & CAP ASSY
S2			1	SWITCH-LOW OIL PRESS
T1			1	COIL-IGNITION
VR1			1	VOLTAGE REGULATOR
W1			1	WIRING HARNESS-GEN SET
TB1			1	REMOTE TERMINAL BLOCK
J2			1	CONNECTOR 12 CKT
CB1			1	CIRCUIT BREAKER (40A 4BF)

1211-119

REV LTR	REVISION	CHK	ENGR	DATE
A	WAS K1-I, TO K1-S1	CLR	WN	8-26-75

Onan — DIVISION OF STUDEBAKER CORPORATION

-01 — MODEL NO 4.0 BF-1R/15203C

120V, 1PH., 3W., 60 Hz

DATE 1-2-75 BY GTC

NAME CONTROL-GEN SET (WIRING DIAGRAM)

DWG NO 611-1121

DWG SIZE C

HUNTSVILLE

611-1123 C

WIRING DIAGRAM

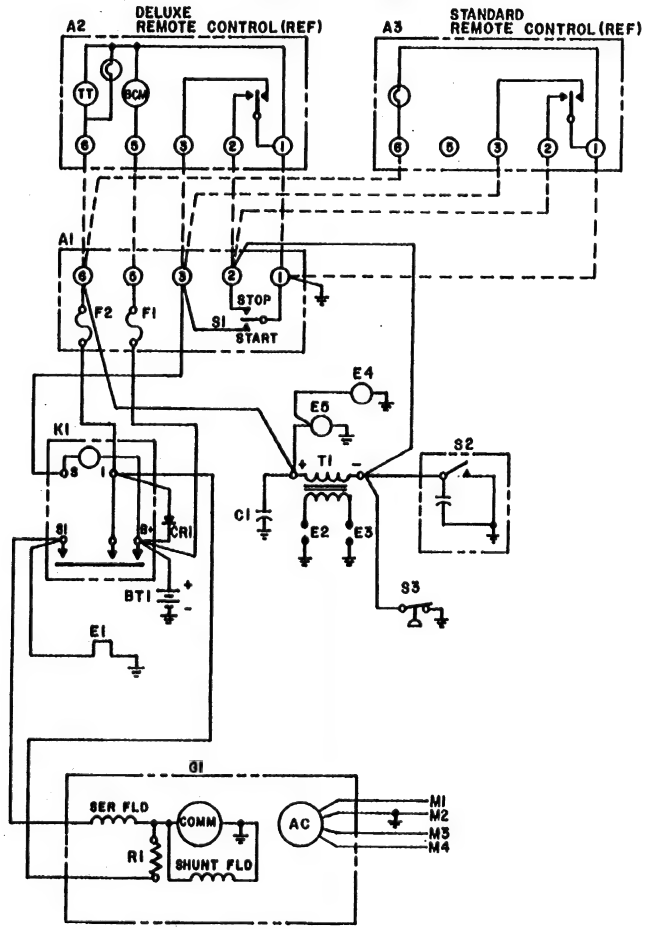

SCHEMATIC

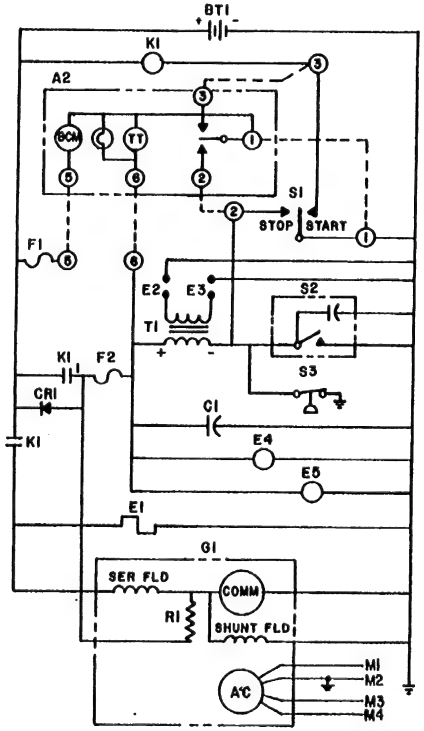

PARTS LIST

REF. DES.	PART NO.	PRI. REF.	QTY	DESCRIPTION
A1	300-1255	C	1	CONTROL ASSY
A2	300-0986	B	1	DELUXE REMOTE CONTROL (REF)
A3	300-0985	B	1	STANDARD REMOTE CONT (REF)
BT1			1	BATTERY 12V
C1			1	CAPACITOR
CR1	358-0072	A	1	DIODE ASSY (REF)
E1			1	CHOKE-ONAN
E2,3			2	SPARK PLUG
E4	307-1457	A	1	SOLENOID-FUEL (REF)
E5	149-1304	-	1	FUEL-PUMP (REF)
F1,2	321-0194	-	2	FUSE (9 AMP, 32V) (REF)
G1			1	GENERATOR
K1			1	SOLENOID-START
R1	353-0057	B	1	RESISTOR FIXED (REF)
S1			1	SWITCH-START-STOP
S2			1	BREAKER & CAP ASSY
S3	309-0237	P	1	SWITCH-LOW OIL PRESS (REF)
T1			1	COIL-IGNITION
OPTION	338-0958	B	1	WIRING HARNESS (CONN-REMOTE) (REF)
OPTION W1	338-0959	C	1	WIRING HARNESS (CABLE-REMOTE CONTROL) (10 FEET LONG) (REF)
OPTION W2	338-0960	C	1	WIRING HARNESS (CABLE-REMOTE CONTROL) (30 FEET LONG) (REF)

611-1123 C

RECONNECTION CHART

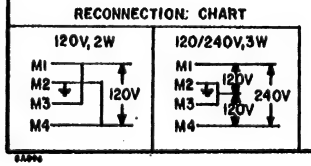

A	COMPLETED MODEL NO	WD	6-9-78
REV	REVISION	CKD	DATE

Onan — DIVISION OF STUDEBAKER CORPORATION, Minneapolis, Minnesota

-01	MODEL NO. 4.0BF-3CR/16002A	DATE 4-10-75	DR. CIP
	120/240V. 1PH. 4W. 60Hz	NAME CONTROL-GEN SET (WIRING DIAGRAM)	
		DWG. NO. 611-1123	DWG SIZE C

611-1127 C

WIRING DIAGRAM

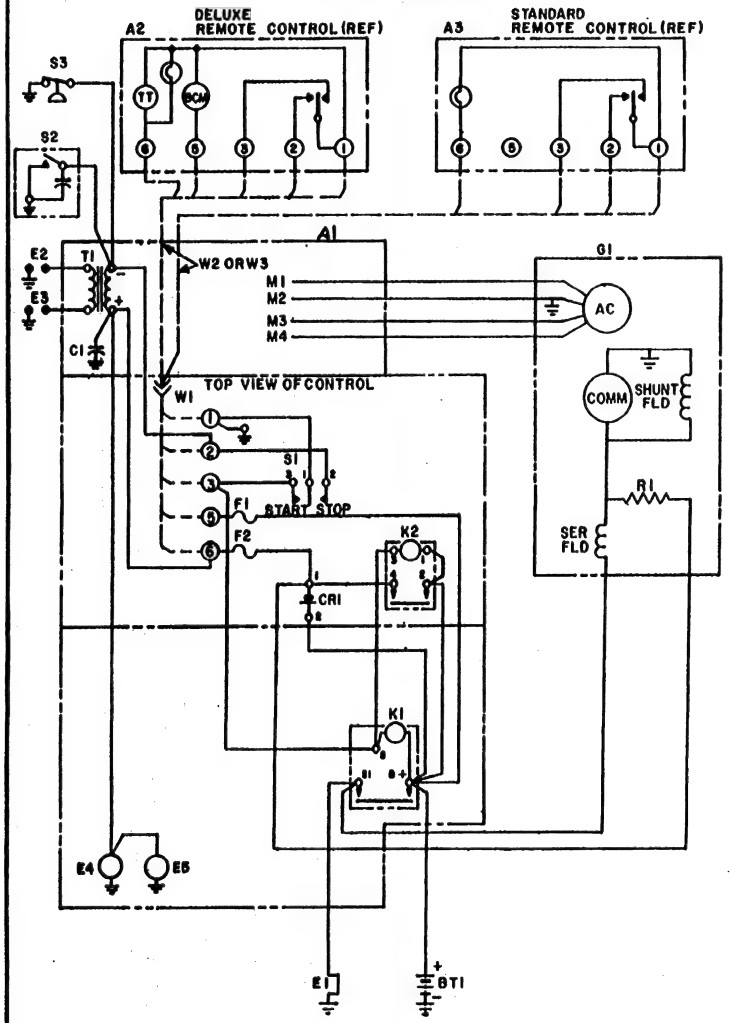

SCHEMATIC

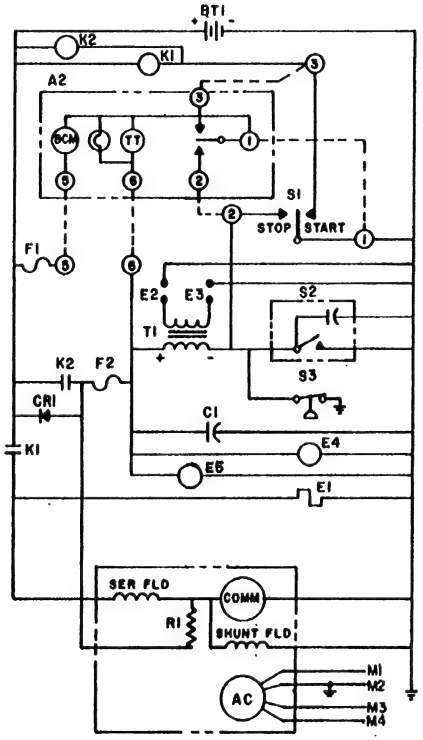

RECONNECTION CHART

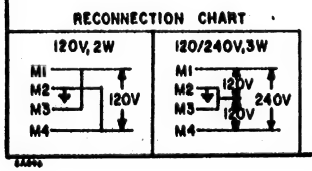

PARTS LIST

	REF. DES.	PART NO.	MFR CODE	QTY	DESCRIPTION
	A1	300-1324	D	1	CONTROL ASSY
	ALL PART NO'S LISTED BELOW ARE REF. ONLY				
	A2	300-0986	B	1	DELUXE REMOTE CONTROL
	A3	300-0985	B	1	STANDARD REMOTE CONTROL
	BT1			1	BATTERY 12V
	C1			1	CAPACITOR
	CR1	305-0235	A	1	RECTIFIER
	E1			1	CHOKE-ONAN
	E2,3			2	SPARK PLUG
	E4			1	FUEL-PUMP
	E5			1	SOLENOID-FUEL
	F1,2	321-0146	-	2	FUSE (10AMP, 32V)
	G1			1	GENERATOR
	K1	307-1498	B	1	SOLENOID-START
	K2	307-1497	B	1	RELAY-CRANK IGNITION
	R1	353-0057	A	1	RESISTOR-FIXED (BF)
		353-0060	A	1	RESISTOR-FIXED (NH & CCK)
	S1			1	SWITCH-START-STOP
	S2			1	BREAKER & CAP ASSY
	S3	309-0237	P	1	SWITCH-LOW OIL PRESS
	T1			1	COIL-IGNITION
OPTION	W1	338-0958	B	1	WIRING HARNESS (CONN-REMOTE)
OPTION	W2	338-0959	C	1	WIRING HARNESS (CABLE-REMOTE CONTROL) (10 FEET LONG)
OPTION	W3	338-0960	C	1	WIRING HARNESS (CABLE-REMOTE CONTROL) (30 FEET LONG)

611-1127 C

LTR	REVISION	CKD	APPD	DATE
A	GENERAL REVISION		WX	3-31-76

Onan DIVISION OF ONAN CORPORATION Minneapolis, Minnesota

-01	MODEL NO. 4.0 BF-3CR/16000 B, 5.0 CCK-3CR/16000, 6.5 NH-3CR/16000	DATE 10-8-75	DR RKE
	120/240V. 1PH. 4W. 60Hz	CHKD WHH	CKD WJB
		NAME CONTROL-GEN SET (WIRING DIAGRAM)	
		SEPIA FROM 611-1130	611-1127
		SIZE C	

611-1133

WIRING DIAGRAM

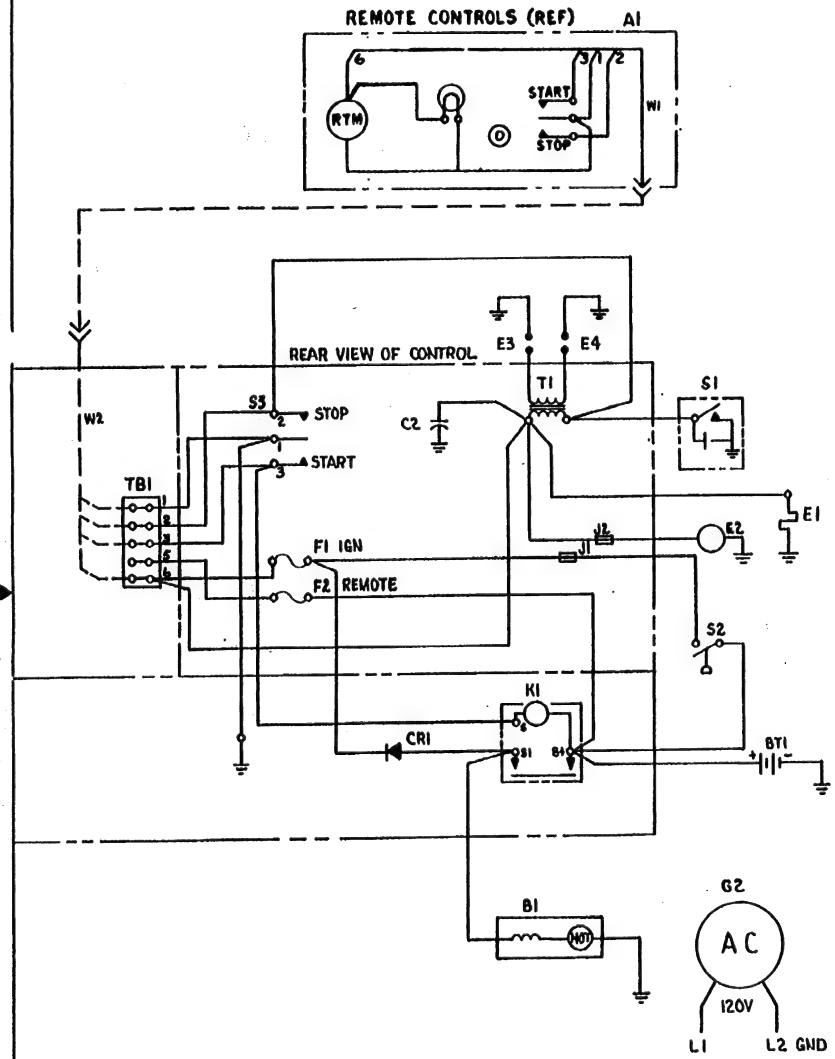

SCHEMATIC

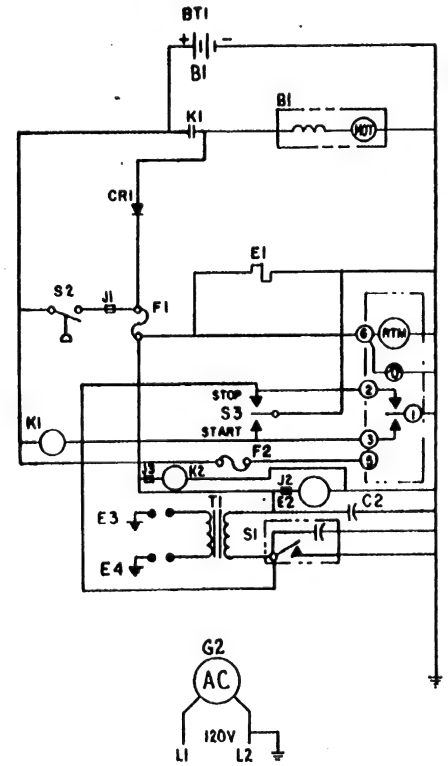

REF DES	PART NO.	REV LTR	QTY	DESCRIPTION
	300-1438	C	1	CONTROL ASSY-GEN SET
A1	300-1434		1	DELUXE REMOTE CONTROL W/W1 (REF)
B1			1	STARTER
BT1			1	BATTERY-12 VOLT
C2			1	CAPACITOR
CR1			1	DIODE
E1			1	CHOKE-ONAN
E2			1	FUEL PUMP
E3,4			2	SPARK PLUG
F1,F2			2	FUSE (5 AMP)
G2			1	GENERATOR
J1,J2			2	CONNECTOR
K1			1	SOLENOID-START
S2			1	SWITCH-LOW OIL PRESSURE
S3			1	SWITCH-START STOP
T1			1	COIL IGNITION
TB1			1	TERMINAL BLOCK
W1	332-1970	A	1	CONNECTOR ASSY (REF)
W2	323-1053	A	1	CONNECTOR ASSY (REF)

611-1133

F	E1 WAS CHOKE-SISSON		11-16-77
E	WAS 120V, 1PH, 3W, 60Hz		
D	MOD WAS 6.0NH-IR/6000		
C	REM J3 (WAS QTY 3)		
B	REM K2 (FUEL SOLENOID)		11-16-77
A	F1,2 WAS FUSE (10 AMP)		12-8-76

Onan — DIVISION OF ONAN CORPORATION, Minneapolis, Minnesota

-01	6.0 NH-IR/17700 M	7-16-76	DFO	CDR
	120V, 1PH, 2W, 60Hz	CONTROL-GEN SET (WIRING DIAGRAM)	611-1133	C

HUNTSVILLE

611-1134 | C

WIRING DIAGRAM

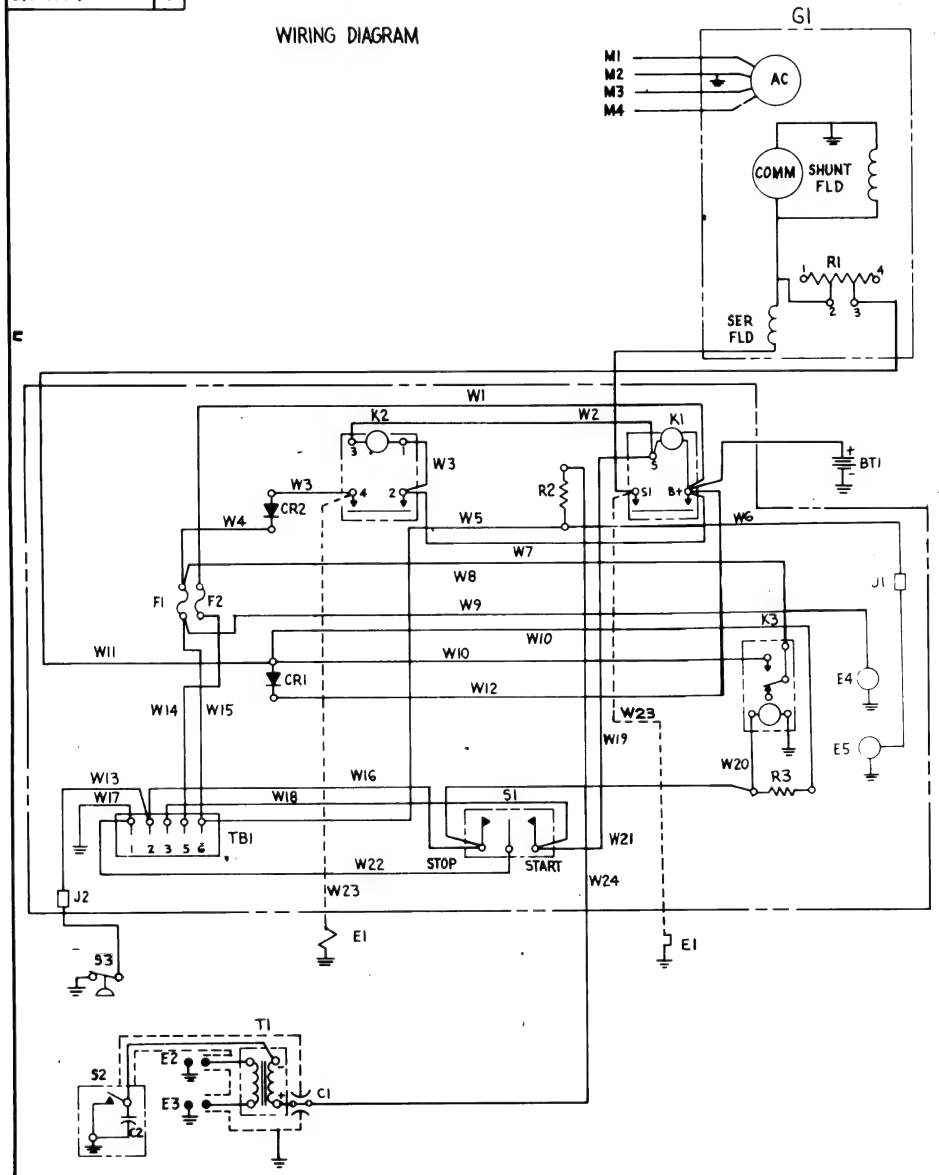

SCHEMATIC

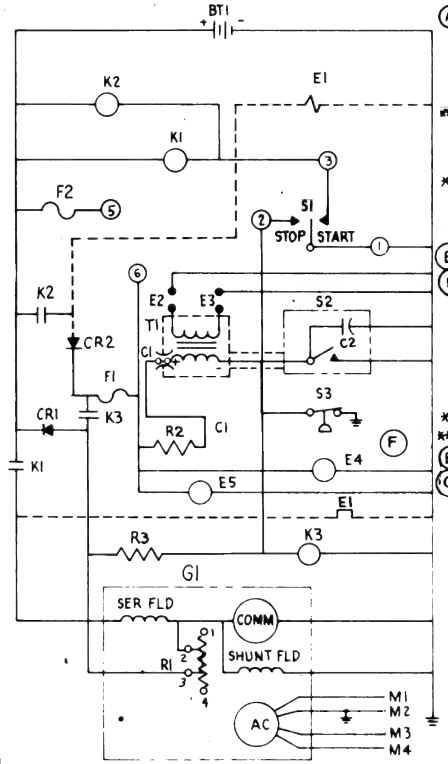

PARTS LIST

REF DES	PART NO	DWG SIZE	QTY	DESCRIPTION
A1	300-1439	C	1	CONTROL ASSY -01
A1	300-1522	C	1	CONTROL ASSY -02
BT1	ALL NOS BELOW		1	BATTERY 12V
C1	ARE REF ONLY		1	CAPACITOR-FEED THRU
CR1	305-0235	A	1	RECTIFIER
CR2	357-0030	A	1	RECTIFIER
E1			1	CHOKE-SISSON -01
E2, E3			2	SPARK PLUG
E4	149-1245	P	1	FUEL-PUMP
E5	307-1340	A	1	SOLENOID-FUEL
F1, F2	321-0146	-	2	FUSE (10 AMP, 32V)
G1			1	GENERATOR
K1	307-1498	B	1	SOLENOID
K2	307-1497	B	1	RELAY-CRANK IGNITION
R1	353-0047	A	1	RESISTOR-FIXED
R2	304-0060	A	1	RESISTOR-FIXED
R3	304-0217	A	1	RESISTOR-FIXED
S1	308-0383	A	1	SWITCH-START-STOP
S2			1	BREAKER & CAP ASSY
S3	309-0237	P	1	SWITCH-LOW OIL PRESS
T1			1	COIL-IGNITION
TB1	332-1918	A	1	TERMINAL BLOCK
C2			1	CAPACITOR-IGN POINTS
	321-0217	P	2	HOLDER-FUSE
E1			1	CHOKE-ONAN -02
K3			1	RELAY - IGN

611-1134

RECONNECTION CHART

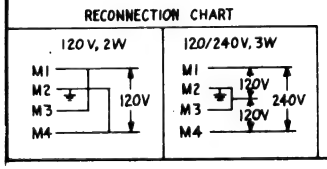

LET	REVISION	ENGR	CKR	DATE
G	ADDED R3 RELAY	WA	RL	3-2-78
F	PEM LINE FROM P2-GND	WA	RL	3-2-78
E	P2 QTY WAS 2	WA	RL	3-21-78
D	R3 QTY WAS 2	WA	RL	9-21-76
C	ADDED -02 5.5NH	WA	RL	4-20-77
B	ADDED E1 -02	WA	RL	4-20-77
A	ADDED 300-1522	WA	RL	4-20-77

-02	5.5NH-53BR/16009J	110/220 1PH 4W; 50 Hz
-01	6.5NH-3CR/17198D	120/240; 1PH 4W; 60Hz

DRAWN BY: WHX 9-29-76

ONAN — DIVISION OF ONAN CORPORATION, Minneapolis, Minnesota

DATE 9-8-76 | DR TWD | ENGR WHX | CKR CDR

TITLE: CONTROL - GEN SET (WIRING DIAGRAM)

SEPIA FROM | DWG NO. 611-1134 | DWG SIZE C

HUNTSVILLE

611-1135 | DWG SIZE C

WIRING DIAGRAM

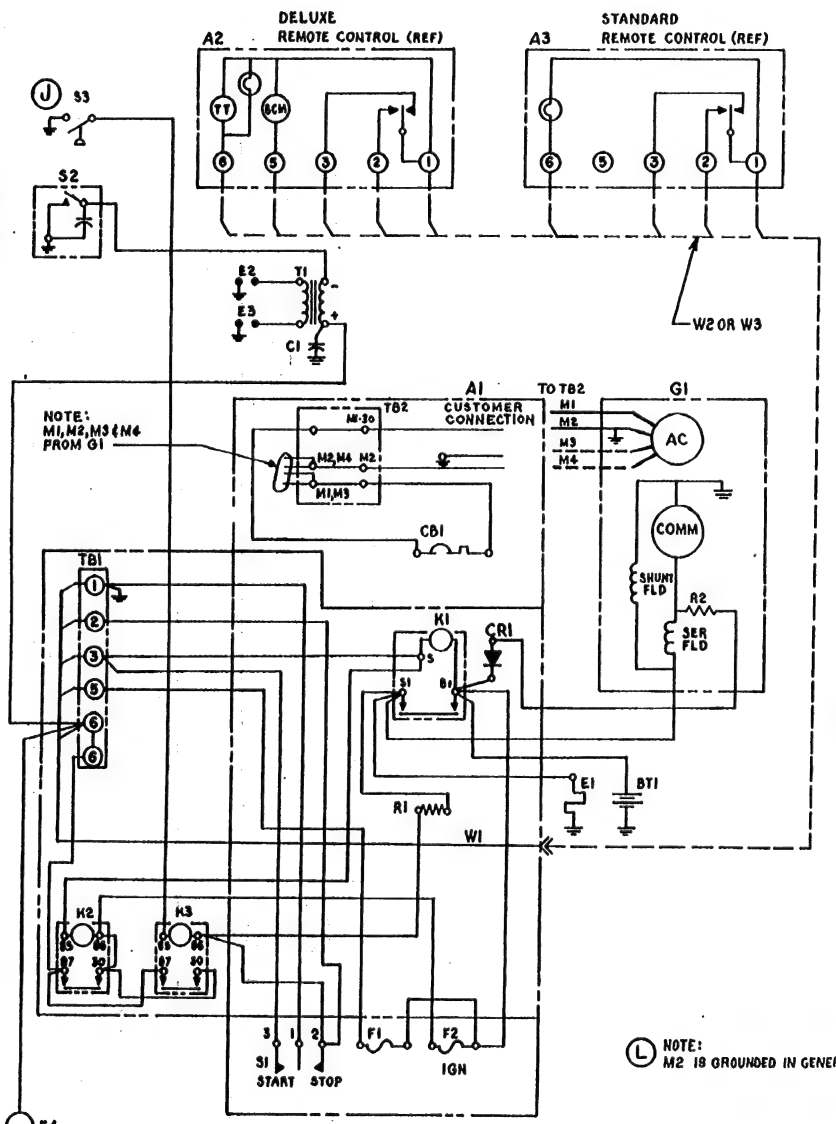

SCHEMATIC

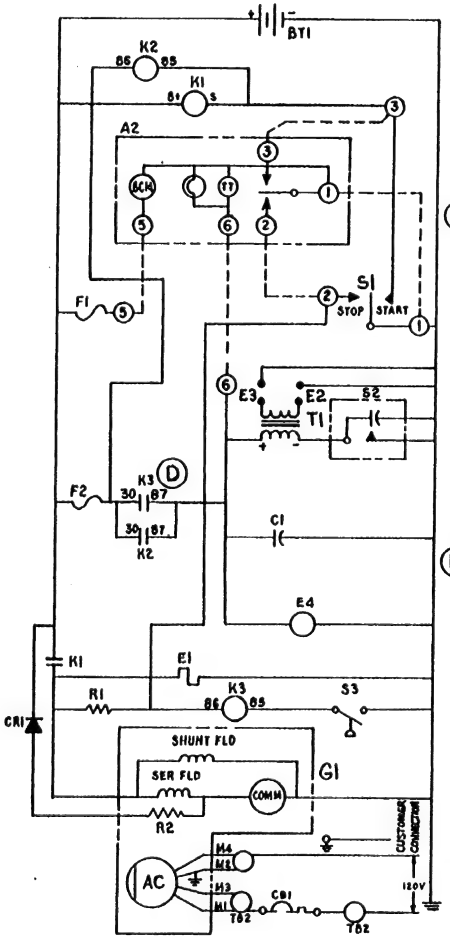

PARTS LIST

REF DES	PART NO.	DWG SIZE	QTY	DESCRIPTION
A1	300-1601	D	1	CONTROL ASSY. (-01) 30AMP
	300-1602	D	1	CONTROL ASSY (-02) 40 AMP
	300-1603	D	1	CONTROL ASSY (-03) 50 AMP
	ALL PART NOS LISTED BELOW ARE REF ONLY			
A2	300-0986	B	1	DELUXE REMOTE CONTROL
A3	300-0985	B	1	STANDARD REMOTE CONTROL
BT1			1	BATTERY - 12V
C1	312-0050	A	1	CAPACITOR
CR1	357-0030	P	1	RECTIFIER (BATT. CHARGING)
E1			1	CHOKE - ONAN
E2, 3			2	SPARK - PLUG
E4	149-1542		1	FUEL PUMP
F1, 2	321-0175	P	2	FUSE HOLDER
	321-0174		2	FUSE - 5 AMP 32V
G1			1	GENERATOR
K1	307-1498	B	1	START SOLENOID
K2	307-1575	P	1	RELAY - CRANK IGNITION
K3	307-1575	P	1	RELAY - RUN IGNITION
R1	304-0431	P	1	RESISTOR - 150 ohm 5W
R2				RESISTOR
S1	308-0383	A	1	SWITCH - START, STOP
S2			1	SWITCH - BREAKER & CAP ASSY
S3			1	SWITCH - LOW OIL PRESS
T1	166-0843	C	1	COIL - IGNITION
TB1	332-0699	A	1	TERMINAL BLOCK
TB2	332-0254	A	1	TERMINAL BOARD
	98-3331	B	1	SILKSCREEN - WD (REF)
CB1	320-0544	C	1	CIRCUIT BREAKER 30 AMP (-01)
	320-0547	C	1	CIRCUIT BREAKER 40 AMP (-02)
	320-0548	C	1	CIRCUIT BREAKER 50 AMP (-03)
W1	338-1078	C	1	WIRING HARNESS (CONN-REMOTE)
* W2	338-1080	C	1	WIRING HARNESS (CABLE-REMOTE CONTROL) (10 FEET LONG)
* W3	338-1081	C	1	WIRING HARNESS (CABLE-REMOTE CONTROL) (30 FEET LONG)

* WHEN USED

LET	REVISION	ENGR	CHK	DATE
C	ADDED -01,-02,-03 TO A1	WH	CDR	10-14-77
J	S3 WAS [illegible]	WH	CDR	10-14-77
H	ADDED CB1	WH	CDR	10-14-77
G	ADDED TB2	WH	CDR	10-14-77
F	E4 WAS 149-1530	WH	CDR	10-14-77
C	REMOVED 300-1534	WH	CDR	8-9-77
B	REMOVED CR2	WH	CDR	8-9-77
A	REMOVED K4	WH	CDR	8-9-77
E	REMOVED 6.5NH-HR/18200F	WH	CDR	8-9-77
D	CHANGED K3 CONTACTS	WH	CDR	7-21-77
C	ADDED 300-1534 TO A1	WH	CDR	6-9-77
B	ADDED CR2	WH	CDR	6-9-77
A	ADDED K4	WH	CDR	6-9-77

L NOTE: M2 IS GROUNDED IN GENERATOR

5.0BGA, 6.5 NH RECONNECTION CHART

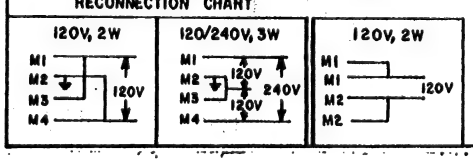

4.0 BFA

LET	REVISIONS	ENGR	CHK	DATE
L	ADDED NOTE	WH	CDR	10-18-77
K	WAS 98-2876	WH	CDR	10-18-77
H	CB1 DWG SIZE WAS A	WH	CDR	10-18-77

	ME	SS	S3	B7	S0	H	PARTS	PO

DASH NO.	MODEL NO.
-01	4.0 BFA-1R/16000A 120V 2W 1PH 60 Hz
-02	5.0 BGA-3CR/16000A
-03	6.5 NH-3CR/16000A 120/240V 4W 1PH 60 Hz

DIVISION OF ONAN CORPORATION Minneapolis, Minnesota

DATE 4-8-77 DR JC ENGR CHK CDR

CONTROL - GEN SET (WIRING DIAGRAM)

SEPIA FROM 611-1135 DWG SIZE C

59

611-1138. SIZE C

WIRING DIAGRAM

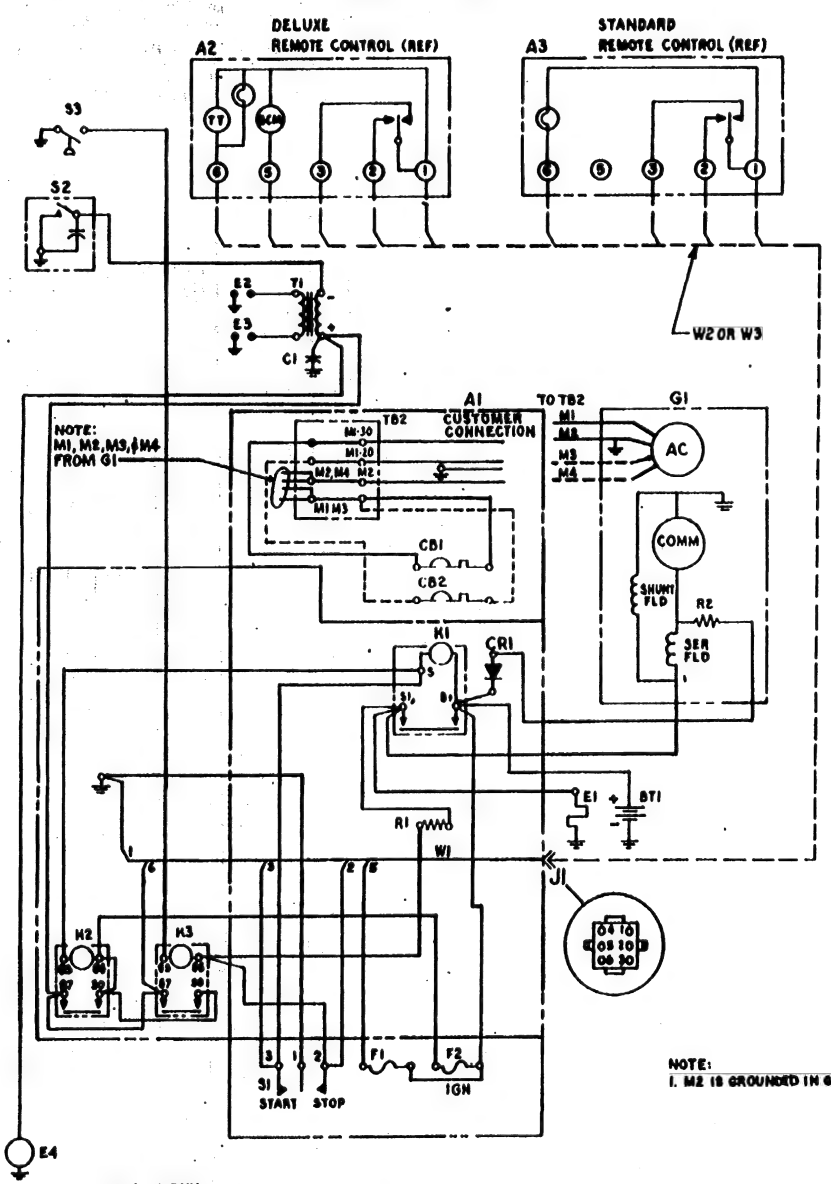

SCHEMATIC

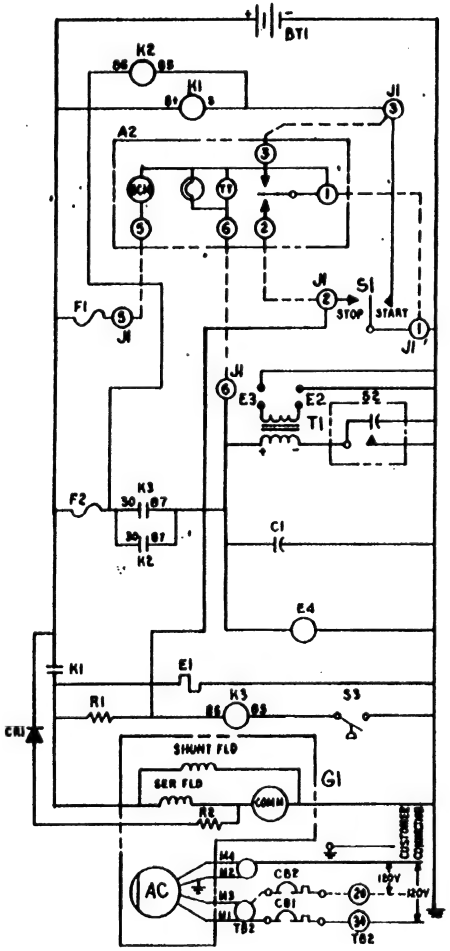

NOTE:
1. M2 IS GROUNDED IN GENERATOR

PARTS LIST				
REF DES	PART NO.	MFG CODE	QTY	DESCRIPTION
A1	300-1541	D	1	CONTROL ASSY. -01
	300-1542	D	1	CONTROL ASSY -02
ALL PART NOS LISTED BELOW ARE REF ONLY				
A2	300-0986	B	1	DELUXE REMOTE CONTROL
A3	300-0985	B	1	STANDARD REMOTE CONTROL
BT1			1	BATTERY - 12V
C1	312-0050	A	1	CAPACITOR
CB1	320-0544	C	1	CIRCUIT BREAKER 30AMP (-01,-02)
CB2	320-0602	A	1	CIRCUIT BREAKER 20AMP (-02)
CR1	357-0030	P	1	RECTIFIER (BATT. CHARGING)
E1			1	CHOKE - ONAN
E2, 3			2	SPARK - PLUG
E4	149-1847	B	1	FUEL PUMP
F1, 2	321-0175	P	2	FUSE HOLDER
	321-0174		2	FUSE - 5 AMP 32V
G1			1	GENERATOR
K1	307-1498	B	1	START SOLENOID
K2	307-1575	P	1	RELAY - CRANK IGNITION
K3	307-1575	P	1	RELAY - RUN IGNITION
R1	304-0431	P	1	RESISTOR - 150 ohm 5W
R2				RESISTOR
J1	923-0440	C	1	SOCKET PLUG REMOTE
S1	308-0383	A	1	SWITCH - START, STOP
S2			1	SWITCH - BREAKER & CAP ASSY
S3			1	SWITCH - LOW OIL PRESS
T1	166-0643	C	1	COIL - IGNITION
	98-3331	B	1	SILKSCREEN - WD (REF)
TB2	332-0284	A	1	TERMINAL BOARD
W1	338-1078	C	1	WIRING HARNESS (CONN-REMOTE)
W2	338-1080	C	1	WIRING HARNESS (CABLE-REMOTE CONTROL, (10 FEET LONG)
W3	338-1081	C	1	WIRING HARNESS (CABLE-REMOTE CONTROL, (30 FEET LONG)

611-1138

* WHEN USED

5.0BGA, 6.5NH RECONNECTION CHART

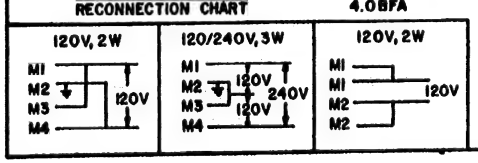

MODEL Nº	
-01	4.0BFA-1R/16019A
-02	5.0BGA-3CR/16019A 6.5NH-3CR/16019K

120V. 1PH 60 Hz 4W

SUPSD DWG SAME Nº DATED 8-3-77 W/CHANGE

DIVISION OF ONAN CORPORATION Minneapolis, Minnesota

DATE 5-23-78 DAY WMK CDR

CONTROL - GEN SET (WIRING DIAGRAM)

611-1138 SIZE C

HUNTSVILLE

611-1140 SIZE C

WIRING DIAGRAM

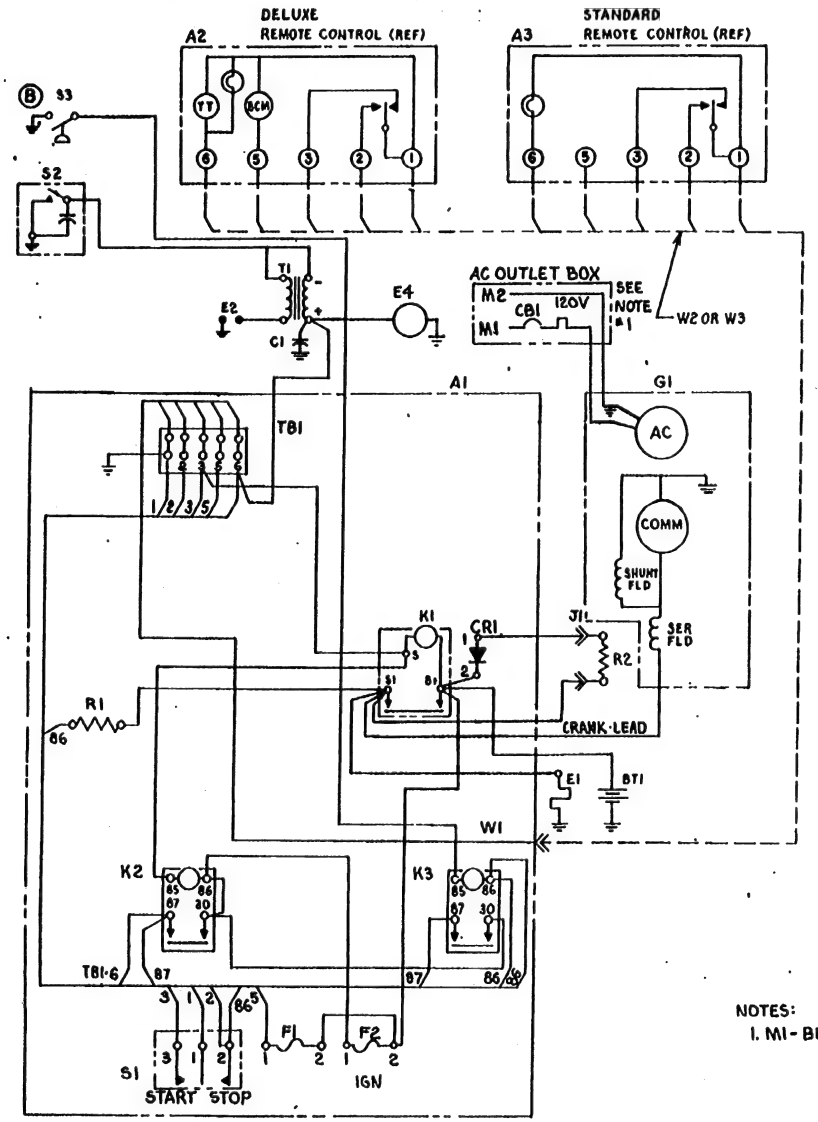

SCHEMATIC

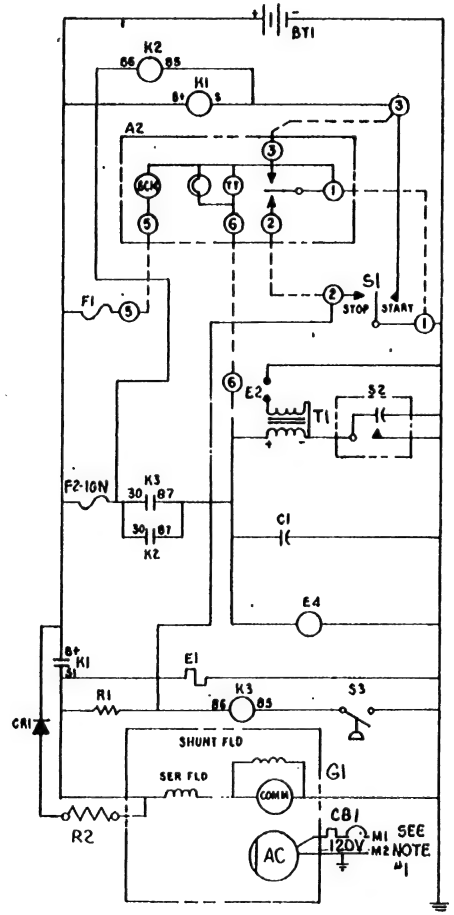

NOTES:
1. M1 - BLACK, M2 - WHITE

PARTS LIST				
REF DES	PART NO.	PRI CUT	QTY	DESCRIPTION
A1	300-1584	C	1	CONTROL ASSY.
	ALL PART NOS LISTED BELOW ARE REF ONLY			
A2	300-0986	P	1	DELUXE REMOTE CONTROL
A3	300-0985	B	1	STANDARD REMOTE CONTROL
BT1			1	BATTERY - 12V
C1	312-0050	A	1	CAPACITOR
CR1	357-0030	P	1	RECTIFIER (BATT. CHARGING)
CB1	320-0544	C	1	30AMP CIRCUIT BRK
E1			1	CHOKE - ONAN
E2			1	SPARK - PLUG
E4	307-1302	A	1	SOLENOID FUEL SHUT OFF
F1, 2	321-0175	P	2	FUSE HOLDER
	321-0174	P	2	FUSE - 5 AMP 32V
G1			1	GENERATOR
K1	307-1498	B	1	START SOLENOID
K2	307-1575	P	1	RELAY - CRANK IGNITION
K3	307-1575	P	1	RELAY - RUN IGNITION
R1	304-0735	P	1	RESISTOR - 175 ohm 5W
R2	353-0050			RESISTOR - 10 OHM .45W
S1	308-0383	A	1	SWITCH - START, STOP
S2			1	SWITCH - BREAKER & CAP ASSY
S3			1	SWITCH - LOW OIL PRESS
T1	166-0278	C	1	COIL - IGNITION
TB1	332-0604	A	1	TERMINAL BLOCK
	98-3358	A	1	SILKSCREEN - WD
J1	508-0200	A	1	BUSHING - TERMINAL
W1	338-1111	C	1	WIRING HARNESS (CONN-REMOTE)
W2	338-1080	C	1	WIRING HARNESS (CABLE-REMOTE CONTROL) (10 FEET LONG)
W3	338-1081	C	1	WIRING HARNESS (CABLE-REMOTE CONTROL) (30 FEET LONG)

611-1140

* WHEN USED

LET	REVISION	CHKD	CKR	DATE
B	S3 WAS [illegible]	KB	CPR	10-18-77
A	WAS 149-1302	KB	CPR	10-18-77

Onan DIVISION OF ONAN CORPORATION Minneapolis, Minnesota

DATE 9-6-77 DR JFM CHKD P.A. CKR EZ

CONTROL - GEN SET (WIRING DIAGRAM)

DASH NO. -01

MODEL NO. 3.0AJ-1R/16017P

120V 1 PH 2W 60 Hz

DRAW NO. 611-1140 SIZE C

REPLA FROM 611-1135

ME. SS SJ 50

611-1141 SIZE C

WIRING DIAGRAM

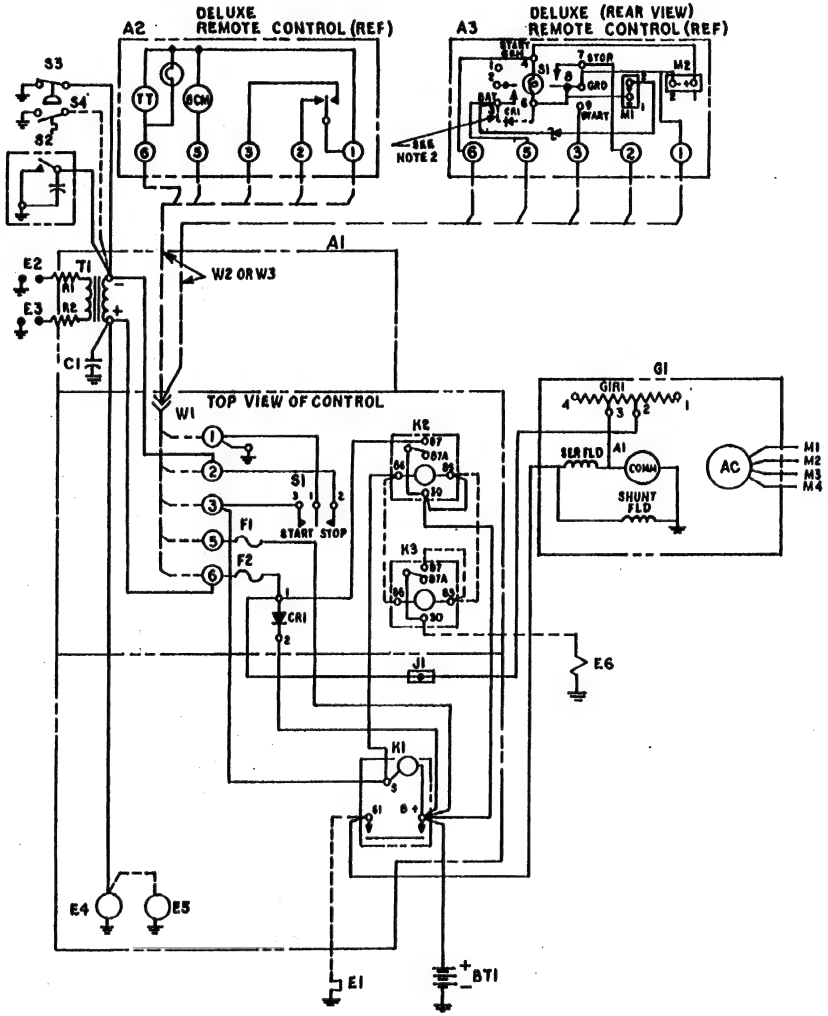

SCHEMATIC

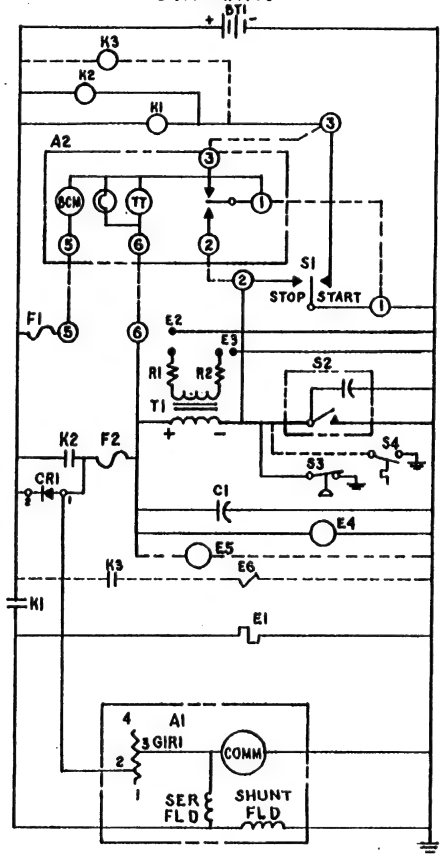

PARTS LIST

REF DES	PART NO.	DWG SIZE	QTY	DESCRIPTION
A1	300-1843	D	1	CONTROL ASSY -01, -02
K3	307-1611	A	1	RELAY & LEAD ASSY -02 (SEE NOTE 3)
	ALL PART NOS BELOW ARE REF ONLY			
A2	300-0986	B	1	DELUXE REMOTE CONTROL
A3	300-0943	B	1	DELUXE REMOTE CONTROL
BT1			1	BATTERY 12V
C1			1	CAPACITOR
CR1	305-0235	A	1	RECTIFIER
E1			1	CHOKE - ONAN
E2, E3			2	SPARK PLUG
E4			1	FUEL PUMP
E5			1	SOLENOID - FUEL (WHEN USED)
E6			1	CHOKE - SISSON (-02)
F1, F2	321-0174	-	2	FUSE (5 AMP, 32 V)
G1			1	GENERATOR
GIR1	353-0047	-	1	RESISTOR
J1	332-1506	-	1	SPLICE - WINDOW
K1	307-1498	B	1	SOLENOID - START
K2	307-1575	P	1	RELAY - IGNITION
R1		B	1	LEAD ASSY - HI TEN
R2		B	1	LEAD ASSY - HI TEN
S1			1	SWITCH - START STOP
S2			1	BREAKER & CAP ASSY
S3	308-0237	P	1	SWITCH - LOW OIL PRESS
S4			1	SWITCH - HIGH AIR TEMP
T1			1	COIL - IGNITION
W1	338-1120	D	1	WIRING HARNESS
W2	338-0959	C	1	WIRING HARNESS (CABLE - REMOTE CONTROL) (10 FEET LONG)
W3	338-0960	C	1	WIRING HARNESS (CABLE - REMOTE CONTROL) (30 FEET LONG)

611-1141

NOTE:
1. REPLACES PC BOARD CONTROL (300-0859) FOR R.V.
2. REMOVE CR11 FROM 1 & 2 AND JUMPER FROM 1 TO GND (FROM GIR1) IN GEN END BELL
3. REMOVE LEAD ASSY FROM HARNESS (338-1120 (D))

RECONNECTION CHART

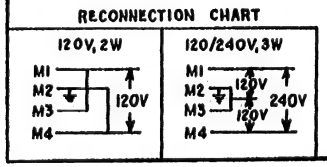

REV	REVISION	CHKD	CKR	DATE
B	CLARIFIED NOTE 2	WN	KB	9-27-8
A	WAS 300-1595	WN	KB	12-2-77

Onan DIVISION OF ONAN CORPORATION Minneapolis, Minnesota

DATE 10-3-77 DR JC CHKD KB CKR CDR

CONTROL - GEN SET (WIRING DIAGRAM)

SEPIA FROM 611-1141 SIZE C

DASH NO.	MODEL NO.
-01	CCK & NH SPEC 12015 & UP
-02	CCK & NH SPEC 12014 & DOWN

120/240V, 4W 1 PH 60 Hz

HUNTSVILLE

611-1142 | SIZE C

SCHEMATIC 98-3430

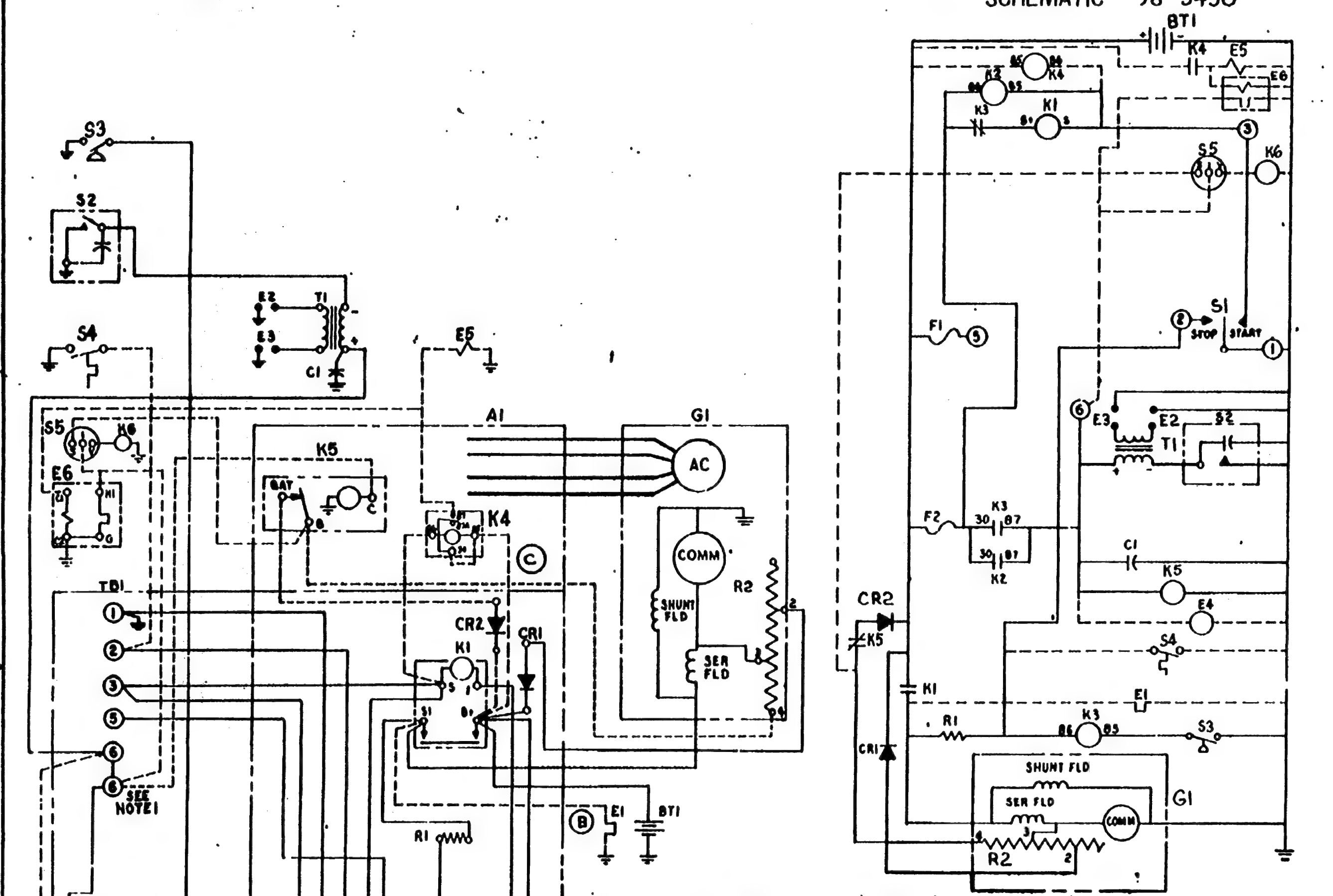

REF DES	PART NO	DWG SIZE	QTY	DESCRIPTION
A1	SEE TAB	D	1	CONTROL ASSY
ALL PART NOS LISTED BELOW ARE REF ONLY				
BT1			1	BATTERY - 12V
C1	312-0050	A	1	CAPACITOR
CR1,2	357-0030	P	2	RECTIFIER (BATT. CHARGING)
E1			1	CHOKE - ONAN (-02, 04)
E2, 3			2	SPARK - PLUG
E4	149-1542		1	FUEL PUMP (01, 03, 04)
E5			1	CHOKE - SIBSON (01, 03)
F1, 2	321-0125	P	2	FUSE HOLDER
	321-0174		2	FUSE - 5 AMP 32V
G1			1	GENERATOR
K1	307-1617	B	1	START SOLENOID
K2	307-1575	P	1	RELAY - CRANK IGNITION
K3	307-1575	P	1	RELAY - RUN IGNITION
R1	352-0161	P	1	RESISTOR - 100 ohm 5W
R2				RESISTOR
K5		P	1	RELAY - CHARGE
K4	307-1618	A	1	RELAY ASSY
K6				FUEL - SOLENOID (NAT GAS ONLY)
S1	308-0383	A	1	SWITCH - START, STOP
S2			1	SWITCH - BREAKER & CAP ASSY
S3			1	SWITCH - LOW OIL PRESS
T1	166-0643	C	1	COIL - IGNITION
TB1	332-0699	A	1	TERMINAL BLOCK
	98-3430	B	1	SILKSCREEN - WD (REF)
S4			1	SWITCH - HIGH AIR TEMP (-05)
S5			1	SWITCH - VACUUM (FUEL SOLENOID) (NAT GAS ONLY)
E6			1	CHOKE - THERMO. MAG

611-1142

REV	DASH NO	CHOKE	MODEL	CONTROL ASSY	FUEL PUMP	K5
	-01	SIBSON CHOKE	NH	300-1628 (D)	ELECTRIC	YES
A	-02	ONAN	NH	300-1635 (D)	MECHANICAL	YES
D	-03	SIBSON-HATKO	NH	300-1650 (D)	ELECTRIC	YES
E	-04	ONAN	NH	300-1694 (D)	ELECTRIC	YES
F	-05	NONE	NH	300-1707 (D)	NONE	YES
G	-06	ONAN-HATKO	CCK	300-1747 (D)	NONE	YES
H	-07	ONAN	NH	300-1794 (D)	ELECTRIC	NO
J	-08	NONE - HATKO	NH	300-1902 (D)	NONE	YES
K	-09	ONAN-HATKO	CCK	300-1925 (D)	ELECTRIC	YES

COMM END			BEARING END
M4	M3	M2#	M1
M3	M2	M0#	M1
M3	M2	M0#	M1
M3	M2	M0#	M1
M3	M2	M0#	M1
M3	M2	M0#	M1

AC SLIP RING

*# VOLTAGE CODE
3C 120/240V, 1PH
4 120/208V, 3PH
5D 120/380V, 3PH
7 220/380V, 3PH
4X 277/480V, 3PH
7X 240/416V, 3PH

RECONNECTION CHART 1PH 4W

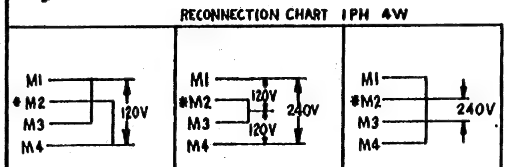

* GROUNDED AC LEAD

NOTE:
1. TB1-5 IS FOR B+ OR REMOTE BATTERY CONDITION METER. TB1-6 IS FOR A REMOTE RUNNING TIME METER OR RUNNING LIGHT.

REV	REVISION			DATE
K	ADDED -09			7-6-79
J	ADD -08 6.5 NH-3R/8747L			6-6-79
C	85 TO 30 JUMPER WAS 85-86	KB	EE	3-13-78
D	ADDED -03			2-3-78
C	K4-86 WAS TO K1-30			12/9/77
C	K4-85 WAS TO K1-S			12/9/77
B	ADDED E1 TO W. D.			12-8-77
A	ADDED -02 MODEL			12-6-77
H	ADDED DASH -07			11-1-78
G	ADDED 300-1747 (D)			8-22-78
G	ADDED DASH -06			8-17-78
F	ADDED DASH -05			2-24-78
E	ADDED -04			5-2-78

DASH NO	MODEL NO
-09	4.0 CCK-3CR/21378U
-08	6.5 NH-4R/8747L
-07	5.0 NH-3CR/16010K
-06	5.0 CCK-3CR/70031R
-05	6.5 NH-3CR/19701L
-04	4.0 CCK 3CR/15000U
-03	6.5 NH-4R/19106L
-02	6.5 NH-3CR/1L
-01	6.5NH-3CR/15000D

120/240 V 4 W 60 Hz

Onan DIVISION OF ONAN CORPORATION Minneapolis, Minnesota

DATE 11-29-77 | DAY | DRAWN W.H.K. | CHK CDR | APPD WHK 12-1-77

CONTROL - GEN SET (WIRING DIAGRAM)

SEPIA FROM 611-1139

611-1142 SIZE C

ME | SB | [illegible] | [illegible] | SD | H | [illegible] | [illegible]

HUNTSVILLE

611-1146 REV C

WIRING DIAGRAM

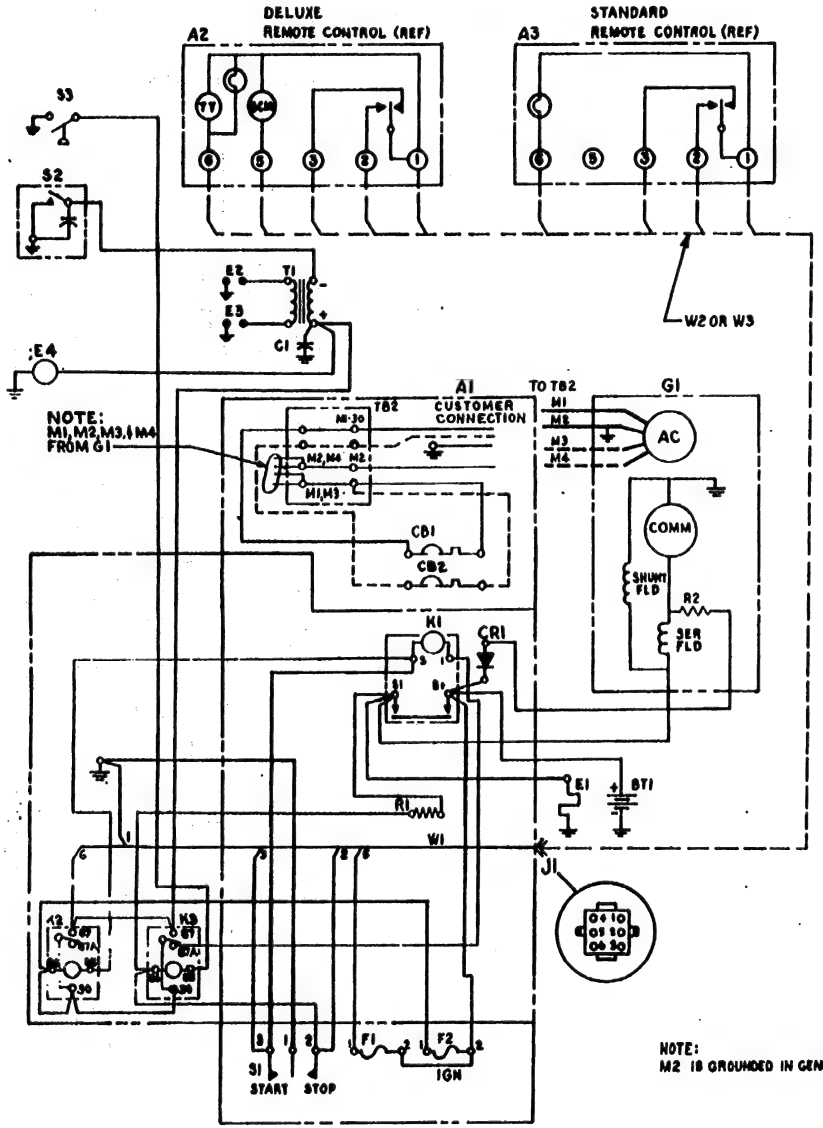

NOTE:
M2 IS GROUNDED IN GENERATOR

SCHEMATIC

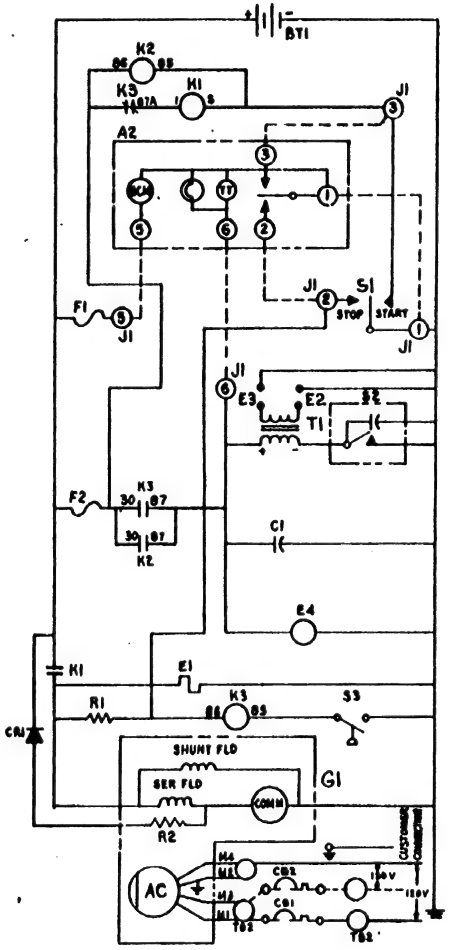

• WHEN USED

THIS DOCUMENT SUBJECT TO FOLLOWING STANDARDS/CODES
☒ UL ☒ CSA ☐ ____ ☐ ____
TO MAINTAIN THIS COMPLIANCE, NO CHANGES OR DEVIATIONS TO BE MADE W/O APPROVAL OF:
CODES & STDS ENGR. ☒ USPP ☒ IPP ☐ ADLD
SIGNED DATE 5-22-79

PARTS LIST

REF DES	PART NO.	CODE IDENT	QTY	DESCRIPTION
A1	300-1764	D	1	CONTROL ASSY (-01) 30AMP
	300-1765	D	1	CONTROL ASSY (-02) (1) 20 & (1) 30 AMP
	300-1766	D	1	CONTROL ASSY (-03) (2) 30 AMP
ALL PART NOS LISTED BELOW ARE REF ONLY				
A2	300-0986	B	1	DELUXE REMOTE CONTROL
A3	300-0985	B	1	STANDARD REMOTE CONTROL
BT1			1	BATTERY - 12V
C1	312-0050	A	1	CAPACITOR
CR1	357-0030	P	1	RECTIFIER (BATT. CHARGING)
E1			1	CHOKE - ONAN
E2, 3			2	SPARK - PLUG
E4			1	FUEL PUMP
F1, 2	321-0175	P	2	FUSE HOLDER
	321-0174		2	FUSE - 5 AMP 32V
G1			1	GENERATOR
K1	307-1617	B	1	START SOLENOID
K2	307-1575	P	1	RELAY - CRANK IGNITION
K3	307-1575	P	1	RELAY - RUN IGNITION
R1	304-0431	P	1	RESISTOR - 150 ohm 5W
R2				RESISTOR
J1	323-0440	C	1	SOCKET PLUG-REMOTE
S1	308-0383	A	1	SWITCH - START, STOP
S2			1	SWITCH - BREAKER & CAP ASSY
S3			1	SWITCH - LOW OIL PRESS
T1	166-0843	C	1	COIL - IGNITION
TB2	332-0254	A	1	TERMINAL BOARD
	98-3717	B	1	SILKSCREEN-SCHEMATIC
CB1, CB2	320-0544	C	1	CIRCUIT BREAKER 30 AMP (-01, -02, -03)
CB2	320-0692	C	1	CIRCUIT BREAKER 20 AMP (-02)
W1	338-1078	C	1	WIRING HARNESS (CONN-REMOTE)
W2	338-1080	C	1	WIRING HARNESS (CABLE-REMOTE CONTROL) (10 FEET LONG)
W3	338-1081	C	1	WIRING HARNESS (CABLE-REMOTE CONTROL) (30 FEET LONG)

611-1146

5.0BGA, 6.5 NH RECONNECTION CHART

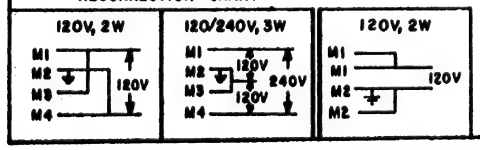

4.0 BFA

-01	MODEL NO. 4.0BFA-1R/16000/B 120V 2W 1PH 60 Hz	
-02	5.0 BGA-3CR/16000/B	
-03	6.5 NH -3CR/16000/M	
	120/240V 4W 1PH 60 Hz	

LET	REVISIONS			
A	ADD STD CODES LABEL	KMB	CAK	5-21-79

ONAN DIVISION OF ONAN CORPORATION Minneapolis, Minnesota

DATE 9-22-78 DR CHK WMH APP CAK

CONTROL - GEN SET (WIRING DIAGRAM)

DEPT. FROM 611-1135 611-1146 REV C

HUNTSVILLE

611-1147 LTR C

WIRING DIAGRAM

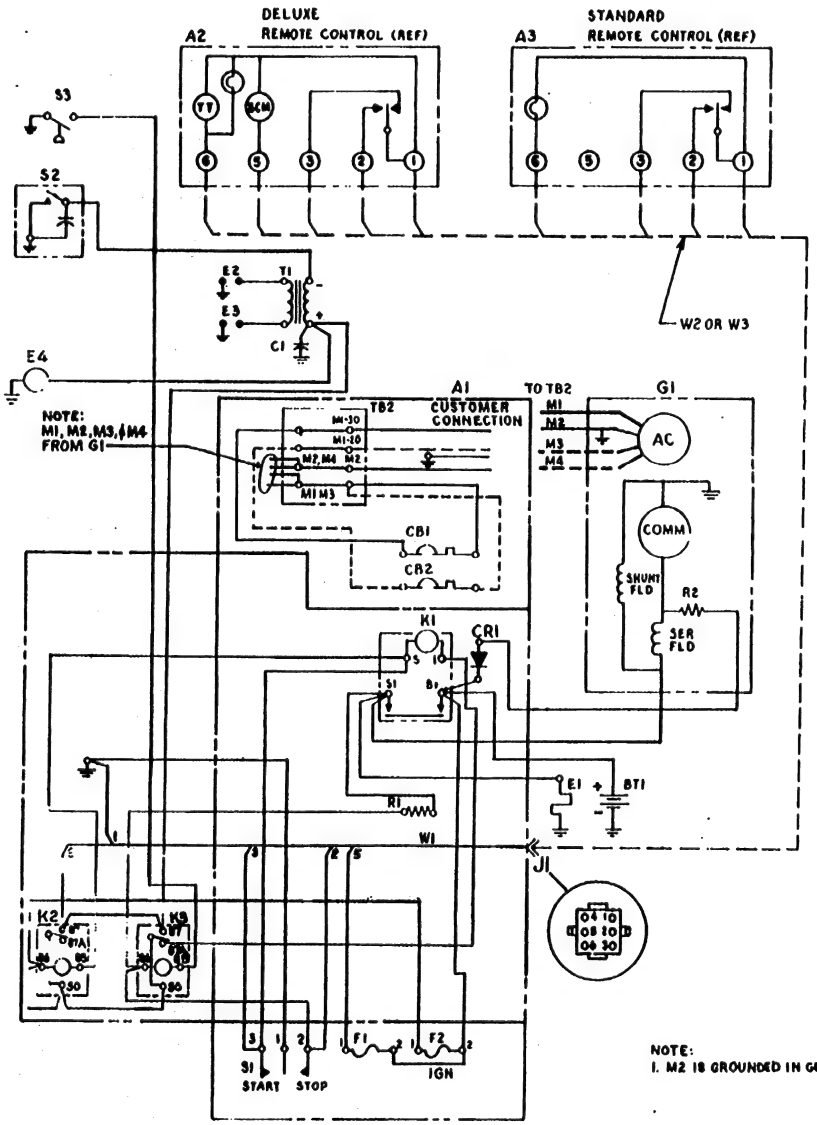

SCHEMATIC

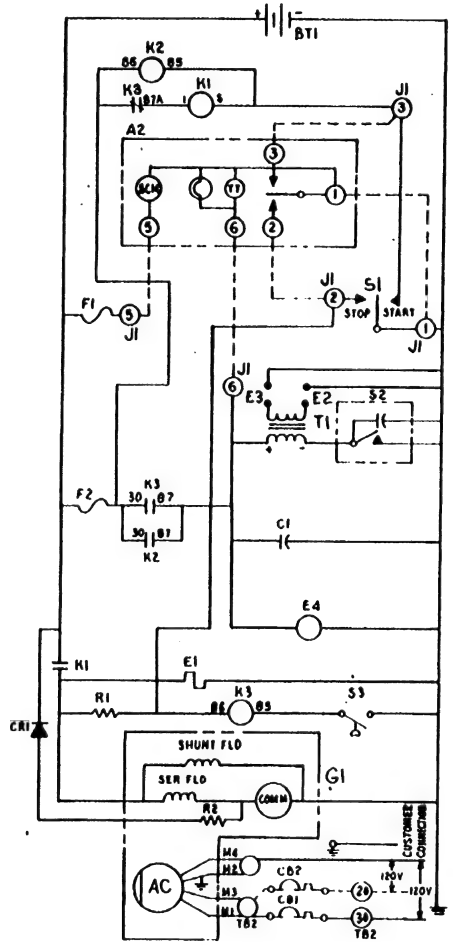

NOTE:
1. M2 IS GROUNDED IN GENERATOR

* WHEN USED

PARTS LIST				
REF DES	PART NO	DWG SIZE	QTY	DESCRIPTION
A1	300-1767	D	1	CONTROL ASSY -01
	300-1768	D	1	CONTROL ASSY -02
	ALL PART NOS LISTED BELOW ARE REF ONLY			
A2	300-0986	B	1	DELUXE REMOTE CONTROL
A3	300-0985	B	1	STANDARD REMOTE CONTROL
BT1			1	BATTERY - 12V
C1	312-0050	A	1	CAPACITOR
CB1	320-0544	C	1	CIRCUIT BREAKER 30AMP (-01,-02)
CB2	320-0692	A	1	CIRCUIT BREAKER 20AMP (-02)
CR1	357-0030	P	1	RECTIFIER (BATT. CHARGING)
E1			1	CHOKE - ONAN
E2, 3			2	SPARK - PLUG
E4			1	FUEL PUMP
F1, 2	321-0175	P	2	FUSE HOLDER
	321-0174		2	FUSE - 5 AMP 32V
G1			1	GENERATOR
K1	307-1617	B	1	START SOLENOID
K2	307 1575	P	1	RELAY - CRANK IGNITION
K3	307 1575	P	1	RELAY - RUN IGNITION
R1	304-0431	P	1	RESISTOR - 150 ohm 5W
R2				RESISTOR
J1	323-0440	C	1	SOCKET PLUG REMOTE
S1	308 0383	A	1	SWITCH - START, STOP
S2			1	SWITCH - BREAKER & CAP ASSY
S3			1	SWITCH - LOW OIL PRESS
T1	166-0643	C	1	COIL - IGNITION
	98-3717	B	1	SILKSCREEN - SCHEMATIC
TB2	332-0254	A	1	TERMINAL BOARD
A1	338 1078	C	1	WIRING HARNESS (CONN-REMOTE)
A2	338-1080	C	1	WIRING HARNESS (CABLE REMOTE CONTROL) (10 FEET LONG)
A3	338 1081	C	1	WIRING HARNESS (CABLE-REMOTE CONTROL) (30 FEET LONG)

611-1147

5.0BGA, 6.5NH RECONNECTION CHART

120V, 2W	120/240V, 3W	4.0BFA 120V, 2W
M1, M2, M3, M4 — 120V	M1, M2, M3, M4 — 120V, 240V, 120V	M1, M1, M2, M2 — 120V

THIS DOCUMENT SUBJECT TO FOLLOWING STANDARDS/CODES: ☒ UL ☒ CSA ☐ ____ ☐ ____
TO MAINTAIN THIS COMPLIANCE, NO CHANGES OR DEVIATIONS TO BE MADE W/O APPROVAL OF: CODES & STDS ENGR. ☒ USPP ☒ IPP ☐ ADLO
RMB DJB 5-22-79
SIGNED DATE

MODEL Nº		
-01	4.0BFA-1R/16019/B	
-02	5.0BGA 3CR/16019/B 6.5NH 3CR/16019/M	

120 V. 1 PH 4 W 60 Hz

A ADD STDCODES LABEL — RMB/CDB 5-21-79
LTR REVISION ENGR CHK DATE

Onan DIVISION OF ONAN CORPORATION Minneapolis, Minnesota

9-22-78 — CONTROL - GEN SET (WIRING DIAGRAM)

REPLS FROM 611-1138 — 611-1147 — SIZE C

HUNTSVILLE

611-1148 | REV C

WIRING DIAGRAM

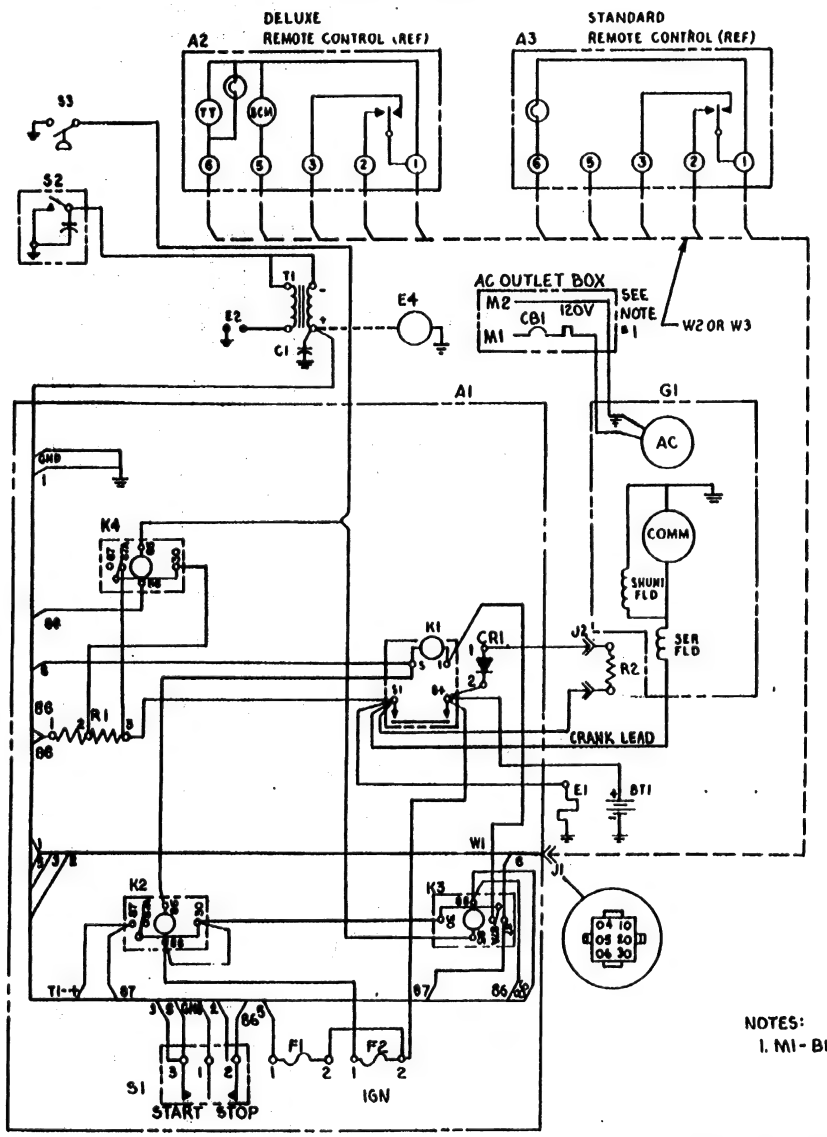

SCHEMATIC

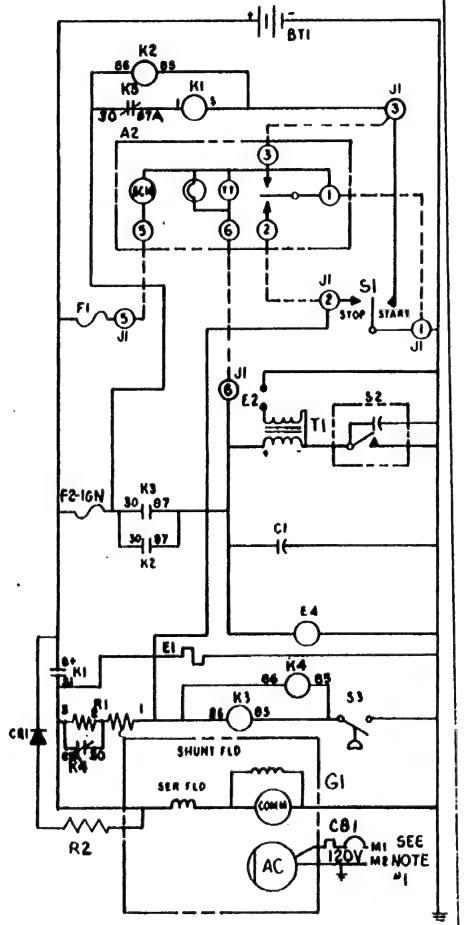

NOTES:
1. M1 - BLACK, M2 - WHITE

PARTS LIST				
REF DES	PART NO	PRI CODE	QTY	DESCRIPTION
A1	300-1781	C	1	CONTROL ASSY
				ALL PART NOS LISTED BELOW ARE REF ONLY
A2	300-0986	P	1	DELUXE REMOTE CONTROL
A3	300-0985	B	1	STANDARD REMOTE CONTROL
BT1			1	BATTERY - 12V
C1	312-0050	A	1	CAPACITOR
CR1	357-0030	P	1	RECTIFIER (BATT. CHARGING)
CB1	320-0544	C	1	30 AMP CIRCUIT BRK
E1			1	CHOKE - ONAN
E2			1	SPARK - PLUG
* E4	307-1302	A	1	SOLENOID FUEL SHUT OFF
F1, 2	321-0175	P	2	FUSE HOLDER
	321-0174	P	2	FUSE - 5 AMP 32V
G1			1	GENERATOR
K1	307-1617	B	1	START SOLENOID
K2	307-1575	P	1	RELAY - CRANK IGNITION
K3	307-1575	P	1	RELAY - RUN IGNITION
K4	307-1878	P	1	RELAY - IGNITION
R1	304-0735	P	1	RESISTOR - 175 OHM 6 W
R2	353-0060			RESISTOR - 10 OHM 45 W
S1	308-0383	A	1	SWITCH START STOP
S2			1	SWITCH - BREAKER & CAP ASSY
S3			1	SWITCH - LOW OIL PRESS
T1	166-0278	C	1	COIL - IGNITION
	98-3769	B	1	SILKSCREEN - SCHEMATIC
J1	323-0440	C	1	SOCKET PLUG - REMOTE
J2	508-0200	A	1	BUSHING - TERMINAL
W1	338-1111	C	1	WIRING HARNESS (CONN-REMOTE)
* W2	338-1080	C	1	WIRING HARNESS (CABLE-REMOTE CONTROL) (10 FEET LONG)
* W3	338-1081	C	1	WIRING HARNESS (CABLE-REMOTE CONTROL) (30 FEET LONG)

611-1148

*WHEN USED

THIS DOCUMENT SUBJECT TO FOLLOWING STANDARDS/CODES
☑ UL ☑ CSA ☐ ____ ☐ ____
TO MAINTAIN THIS COMPLIANCE, NO CHANGES OR DEVIATIONS TO BE MADE W/O APPROVAL OF:
CODES & STDS ENGR. ☑ USPP ☑ IPP ☐ ADBO
RMB / 7-23-80
SIGNED DATE

3840	B	ADD WHEN USED TO E4	RW	10-6-80
ER	A	ADD STD CODE LABEL		
LET		REVISION	ENGR	DATE

ONAN DIVISION OF ONAN CORPORATION Minneapolis, Minnesota

DATE 10-12-78 | DR R.C. | CHK | CODE

CONTROL - GEN SET (WIRING DIAGRAM)

DATE NO -01 | MODEL NO 3.0AJ-1R/160175

120V 1PH 2W 60 Hz

SIZE C | 611-1148

ME SS PA SO PM SJ PARTS PD

611-1152 C

SCHEMATIC 98-3430

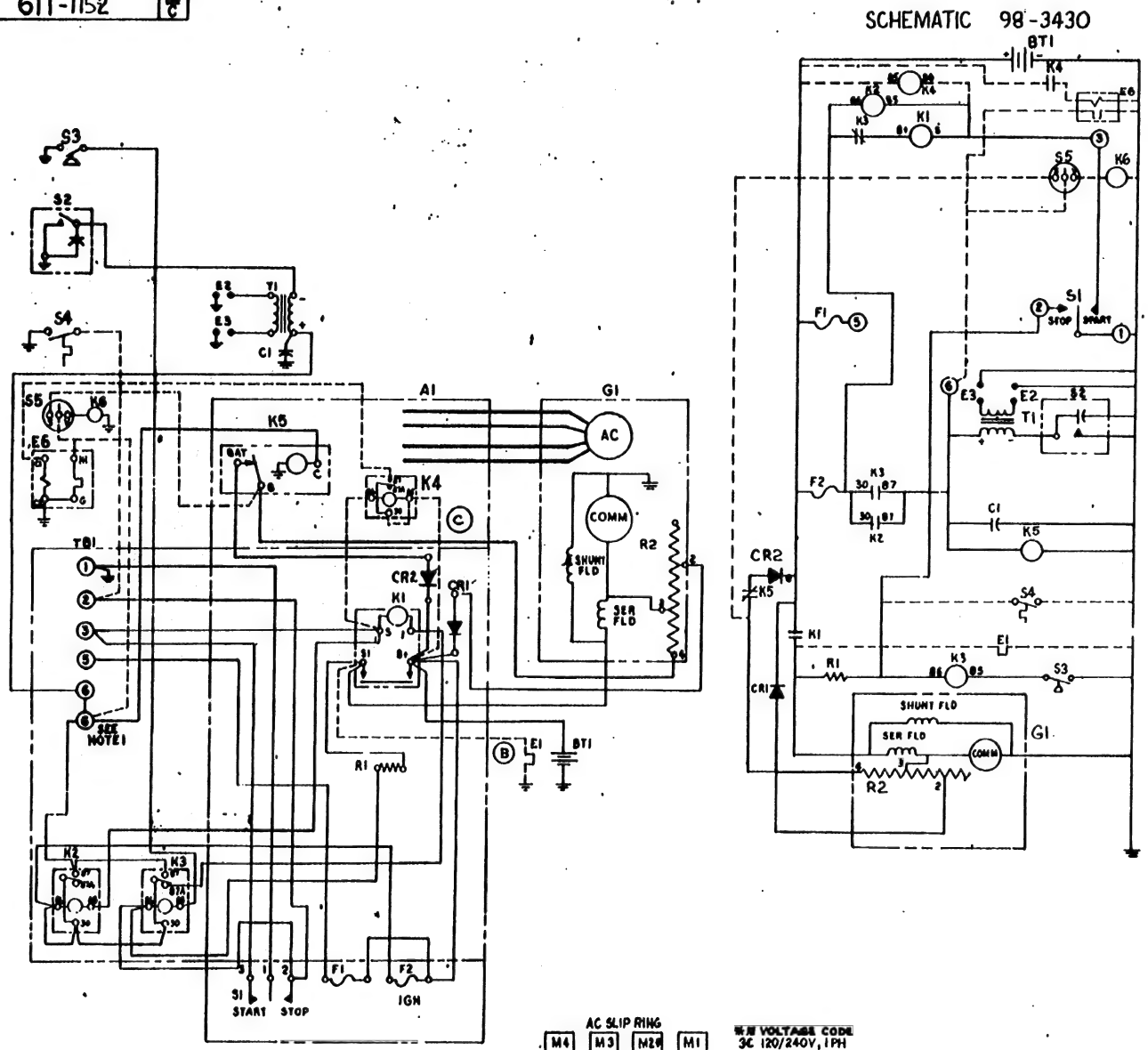

PARTS LIST				
REF DES	PART NO.	MFG CODE	QTY	DESCRIPTION
A1	300-1871	D	1	CONTROL ASSY (-01 + -02)
	307-1632	A	1	RELAY ASSY -02 (SEE NOTE 2)
	ALL PART NOS LISTED BELOW ARE REF ONLY			
BT1			1	BATTERY - 12V
C1	312-0050	A	1	CAPACITOR
CR1, 2	357-0050	P	2	RECTIFIER (BATT. CHARGING)
E1			1	CHOKE - ONAN (-01)
E2, 3			2	SPARK - PLUG
F1, 2	321-0175	P	2	FUSE HOLDER
	321-0174		2	FUSE - 5 AMP 32V
G1			1	GENERATOR
K1	307-1617	B	1	START SOLENOID
K2	307-1575	P	1	RELAY - CRANK IGNITION
K3	307-1575	P	1	RELAY - RUN IGNITION
R1	352-0161	P	1	RESISTOR - 100 ohm 5W
R2				RESISTOR
K5		P	1	RELAY-CHARGE
K4	307-1618	A	1	RELAY ASSY
K6				FUEL-SOLENOID (NAT GAS ONLY)
S1	308-0383	A	1	SWITCH - START, STOP
S2			1	SWITCH - BREAKER & CAP ASSY
S3			1	SWITCH - LOW OIL PRESS
T1	166-0843	C	1	COIL - IGNITION
TB1	332-0699	A	1	TERMINAL BLOCK
	98-3430	B	1	SILKSCREEN-WD (REF)
S4			1	SWITCH-HIGH AIR TEMP
S5			1	SWITCH-VACUUM (FUEL SOLENOID) (NAT GAS ONLY)
E6			1	CHOKE - THERMO. MAG (-02)

611-11, 2

NOTE:

1. TB1-5 IS FOR B+ OR REMOTE BATTERY CONDITION METER. TB1-6 IS FOR A REMOTE RUNNING TIME METER OR RUNNING LIGHT.
2. REMOVE 336-3054 LEAD (E1, K1-S1) FROM 338-1218 HARNESS FOR -02.

RECONNECTION CHART 1PH 4W

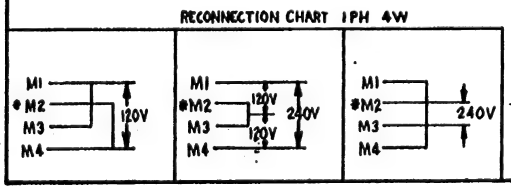

* GROUNDED AC LEAD

AC SLIP RING

COMM END			BEARING END
M4	M3	M2*	M1
M3	M2	M0*	M1
M3	M2	M0*	M1
M3	M2	M0*	M1
M3	M2	M0*	M1
M3	M2	M0*	M1

W.N.	VOLTAGE CODE
3C	120/240V, 1PH
4	120/208V, 3PH
5D	120/380V, 3PH
7	220/380V, 3PH
4X	277/460V, 3PH
7X	240/416V, 3PH

REVISION			

Onan DIVISION OF ONAN CORPORATION Minneapolis, Minnesota

DATE 4-9-79 MGR WHX

CONTROL - GEN SET (WIRING DIAGRAM)

DRAWN WHX 4-9-79

-01 4.0 (5.0 CCK + R/IR)
-02 5.5 (6.5 NH + R/IR)
STANDARD REMOTE, NOT FOR HOME STANDBY

120/240 V 4 W 60 Hz

MFG. FORM 611-11

611-1152 C

HUNTSVILLE

611-1157 | C

WIRING DIAGRAM

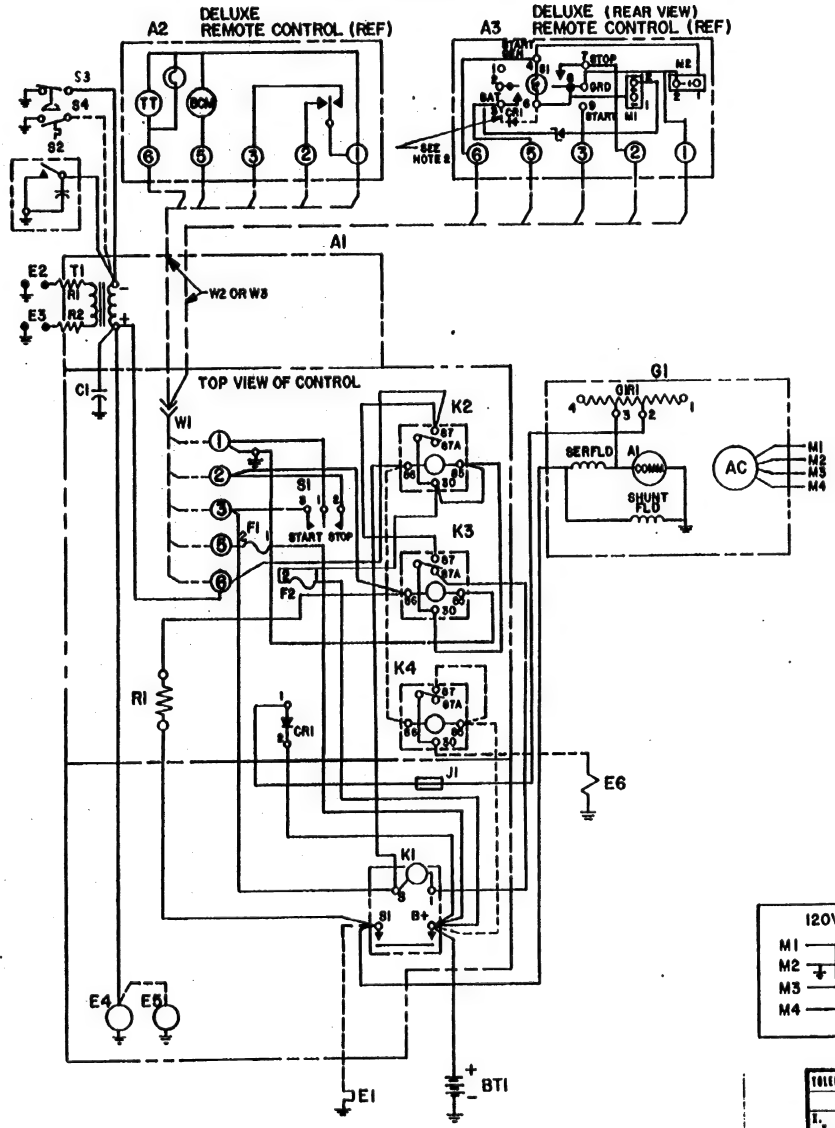

SCHEMATIC

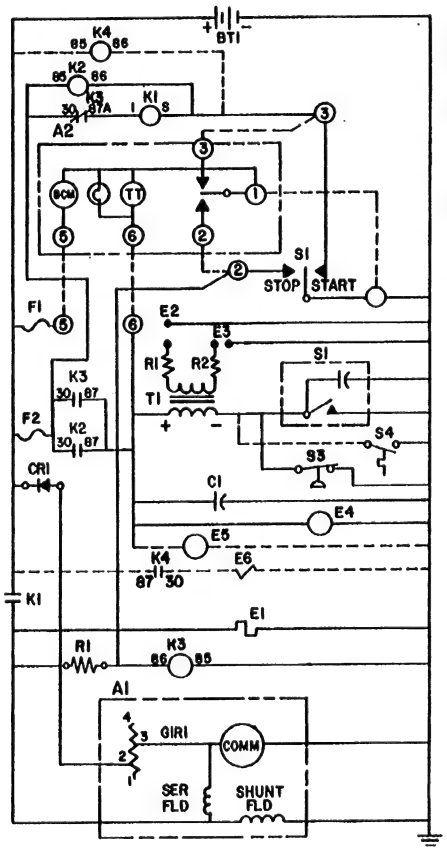

NOTES:

1. REPLACES PC BOARD CONTROL (300-0859) FOR R.V.
2. REMOVE CRI1 FROM 1 & 2 AND JUMPER FROM 1 TO GND (FROM GIR1) IN GEN END BELL
3. REMOVE 336-3260 LEAD ASSY FROM HARNESS (338-1337 (D)).

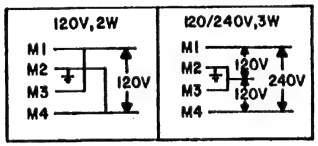

PARTS LIST

REF DES	PART NO.	TYPE	QTY	DESCRIPTION
A1	300-2028	D	1	CONTROL ASSY -01, -02
K4	307-1872	A	1	RELAY & LEAD ASSY -02 (SEE NOTE 3)
	ALL PART NOS BELOW ARE REF ONLY			
A2	300-0986	B	1	DELUXE REMOTE CONTROL
A3	300-0943	B	1	DELUXE REMOTE CONTROL
BT1			1	BATTERY 12V
C1			1	CAPACITOR
CR1	357-0030	A	1	RECTIFIER
E2,E3			2	SPARK PLUG
E4			1	FUEL PUMP
E5			1	SOLENOID - FUEL (WHEN USED)
E6			1	CHOKE - SISSON (-02)
F1,F2	321-0174	-	2	FUSE (5 AMP, 32 V)
G1			1	GENERATOR
GIR1				RESISTOR
J1	332-1506	-	1	SPLICE - WINDOW
K1	307-1617	B	1	SOLENOID - START
K2,K3,K4	307-1575	P	3	RELAY - IGNITION
T1-R1		B	1	LEAD ASSY - HI TEN
T1-R1		B	1	LEAD ASSY - HI TEN
R1	352-0161	P	1	RESISTOR - 100 Ω 5W
S1			1	SWITCH - START
S2			1	BREAKER & CAP ASSY
S3			1	SWITCH - LOW OIL PRESS
S4			1	SWITCH - HIGH AIR TEMP
T1			1	COIL - IGNITION
E1			1	CHOKE - ONAN -01

611-1157 C

8423	B	TB1-2 TO K3-86 WAS TB1-2 TO T1-	4-5	RL	RL	2-22-81
3963	A	K1-B+ TO K4-85 WAS K3-30 TO K4-85	3-6	RL	RL	10-[illegible]-80
1318	-	RLSE FOR PROD				
ER	LET	REV	DWN	CKR	ENG	DATE

ITEM	*BULK	PART NO.	DWG SIZE	QTY.	DESCRIPTION OR MATERIAL

TOLERANCES UNLESS OTHERWISE SPECIFIED: MM — INCH; .X ± .XX ± .XXX ± .XXXX ±; +0.15 -0.05; +.000 -.002; ANGLES ±; SCALE —

MFRG ASSY; SIM TO; Third Angle Projection

The proprietary design information on this print is owned by Onan, a Division of Onan Corporation. Conveyance of this right is not extended to others.

611-1157 C

	INITIAL	DATE
DR	F.A.	8-30-79
CKR	KD CDR	2-2-80
ENGR	Wm Hagar	10-10-79
STAMP SEL		
PROD SEL	W.Y.B.	12-13-79
PROD SEL		

SEPIA FROM

SEC | PUR | ME | QC | PO

A DIVISION OF ONAN CORPORATION
Minneapolis, Minnesota

CONTROL - GEN SET
(WIRING DIAGRAM)

-01 CCK & NH/12015 & UP
-02 CCK & NH/12014 & DOWN

611-1157 | DWG SIZE C

HUNTSVILLE

FORM 8008

611-1160 SIZE C

WIRING DIAGRAM

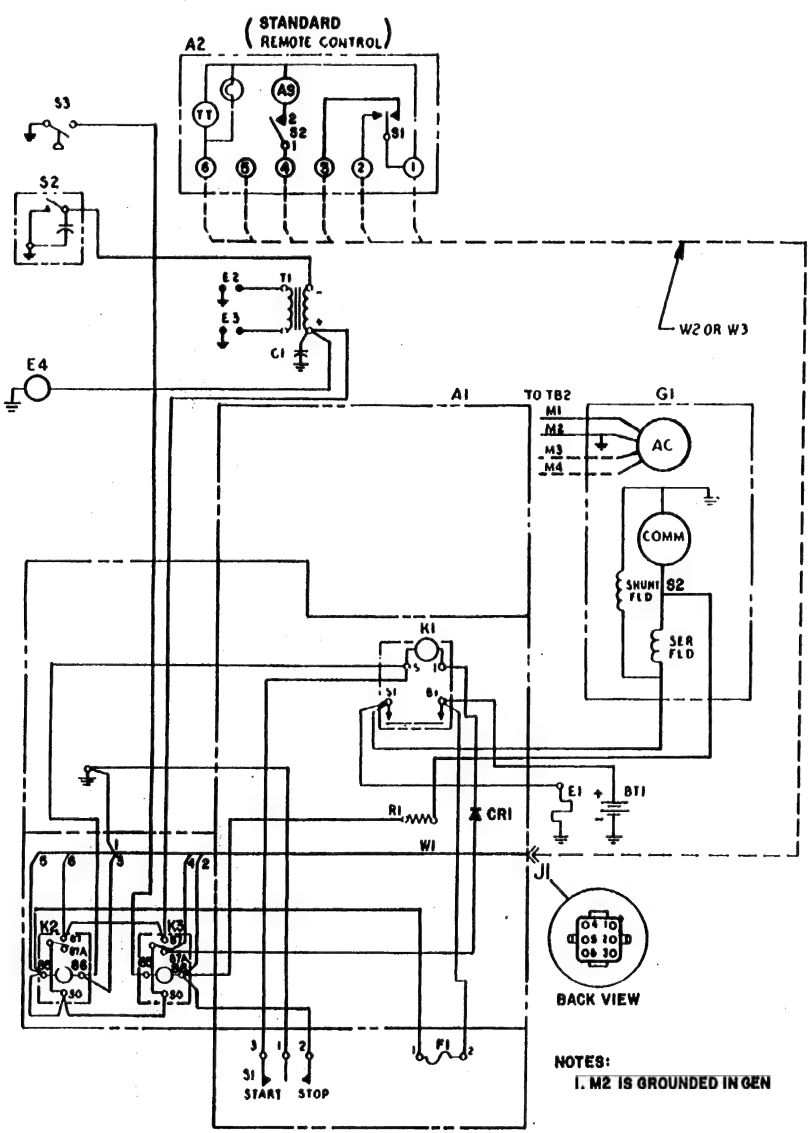

NOTES:
1. M2 IS GROUNDED IN GEN

SCHEMATIC

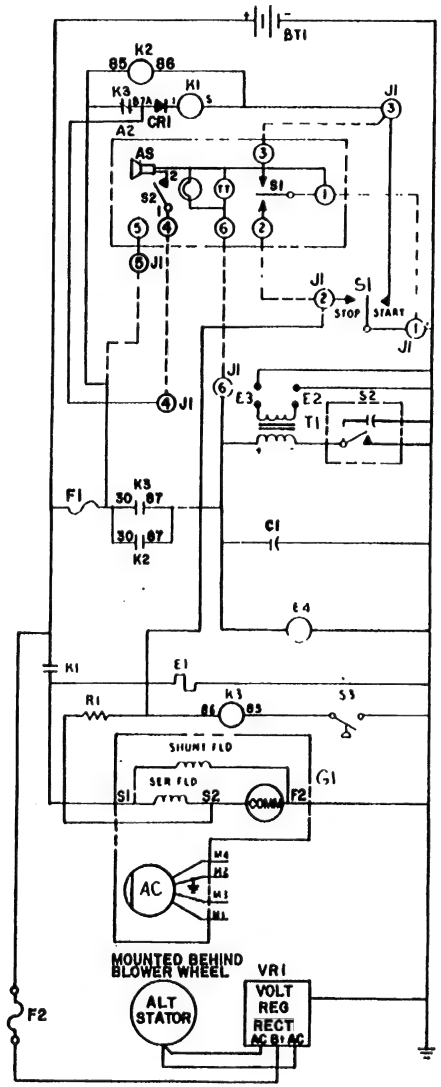

PARTS LIST

REF DES	PART NO	DWG SIZE	QTY	DESCRIPTION
A1	300-2169	D	1	CONTROL ASSY -01
	ALL PART NOS LISTED BELOW ARE REF ONLY			
A2	300-2182	C	1	STANDARD REMOTE CONTROL
BT1			1	BATTERY - 12V
C1	312-0050	A	1	CAPACITOR
CR1	357-0030	P	1	RECTIFIER-SILICON
E1			1	CHOKE - ONAN
E2, 3			2	SPARK - PLUG
E4			1	FUEL PUMP
F1	321-0175	P	1	FUSE HOLDER
	321-0146		1	FUSE - 10 AMP, 32V
F2			1	IN LINE FUSE, 30 AMP
G1			1	GENERATOR
K1	307-1896	P	1	RELAY-START SOLENOID
K2	307-1699	P	1	RELAY-SPDT
K3	307-1699	P	1	RELAY-SPDT
R1	304-0161	P	1	RESISTOR - 100 OHM 5W
J1	323-1221	P	1	CONNECTOR-CAP
S1	306-[illegible]	S	[illegible]	SWITCH [illegible] STOP
S2			[illegible]	SWITCH BREAKER & CAP ASSY
S3			[illegible]	SWITCH OIL PRESS
T1	166-0643	[illegible]	[illegible]	[illegible]
VR1			1	REGULATOR-RECTIFIER-VOLTAGE
	338-1454	A	1	[illegible] HARNESS CONN REMOTE

611-1160

REV DES		REVISION	CHKD	CKD	DATE
6374	B	WAS R1 TO K1-S1			4-21-81
4180	A	ADD CR1 (357-0030)			1-12-80
3757	–	RLSE FOR PROD			
ER					

6.5NH RECONNECTION CHART

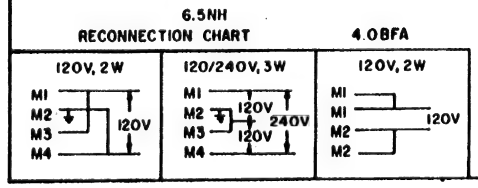

MODEL Nº

-01 4.0 BFA-1R/23000C
6.5 NH-3CR/23000P

120 V. 1 PH
4 W 60 Hz

ONAN DIVISION OF ONAN CORPORATION
Minneapolis, Minnesota

DATE 9-18-80 DR RLW

CONTROL - GEN SET
(WIRING DIAGRAM)

SERIES FROM 611-1147

611-1160 SIZE C

HUNTSVILLE

ME SS

611-1163 D

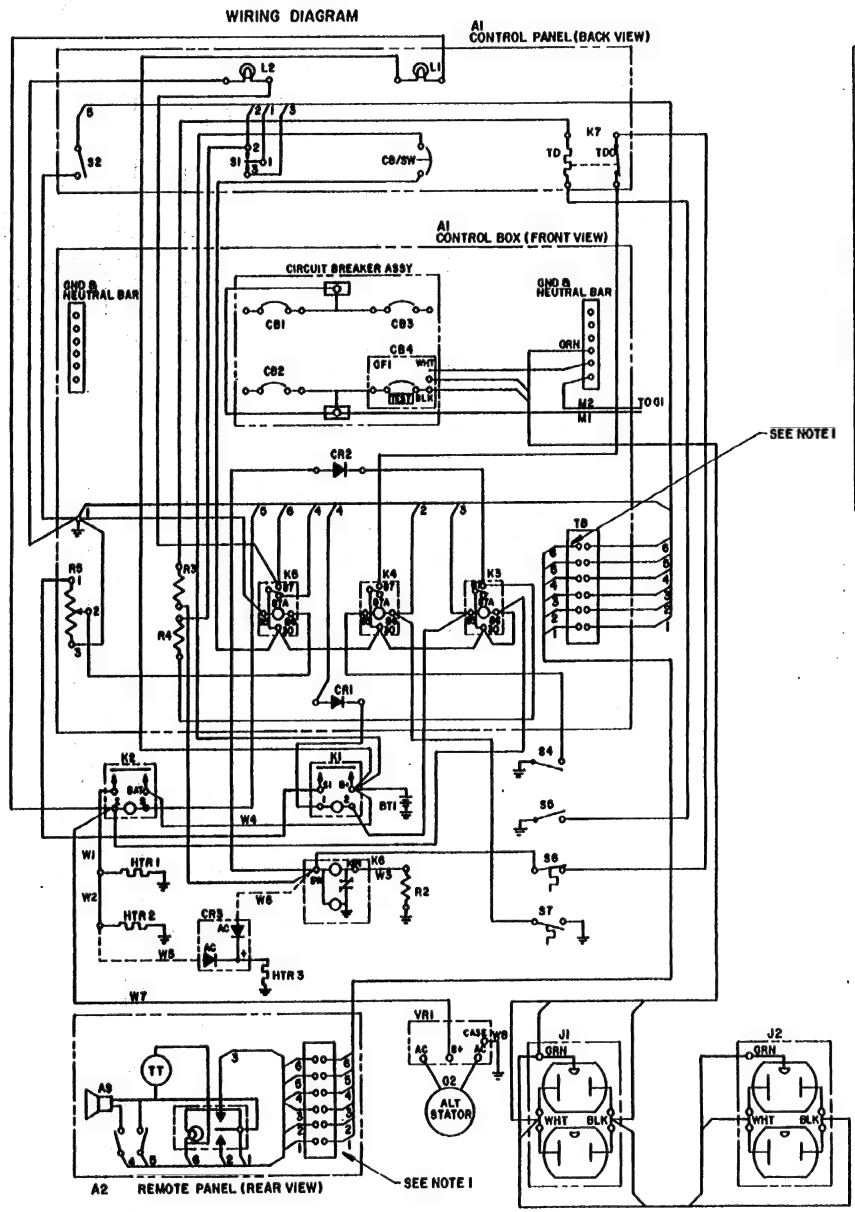

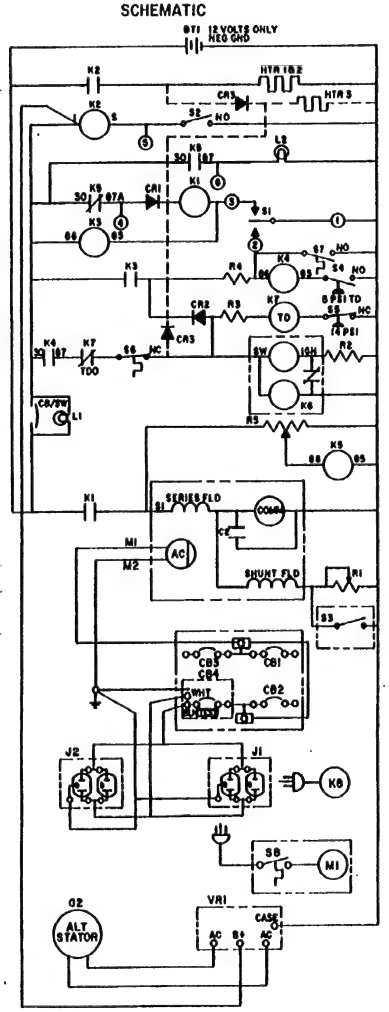

6195	-	RLSE FOR PROD	

NOTES:

1. COLOR CODE: WHEN USED W/SO CABLE, ONAN 334-2116
   1-WHITE-GROUND
   2-RED-STOP
   3-GREEN-START
   4-ORANGE-ALARM
   5-BLUE-PREHEAT
   6-BLACK-RUN LIGHT & TIMER
2. ALL COMPONENTS ARE SHOWN IN THE DE-ENERGIZED POSITION.

J2	323-1222	-	REF	RECEPTACLE-DUPLEX (120V, 15A)
W6	336-9074	A	REF	LEAD (VR1 TO GND)
W7	336-9073	A	REF	LEAD (VR1-B+ TO K2-1)
W8	336-8981	A	REF	LEAD (K6-SW TO CR3-AC)
W5	336-8980	A	REF	LEAD (HTR-2 TO CR3-AC)
W4	336-8982	A	REF	LEAD (K2-BAT TO K1-B+)
W3	336-8979	A	REF	LEAD (K6-I TO R2)
W2	336-1505	A	REF	LEAD (HTR-1 TO HTR-2)
W1	336-8943	A	REF	LEAD (K2 TO HTR-1)
VR1	191-1351	C	REF	REGULATOR
TB1	332-0899	A	REF	TERMINAL BLOCK (8 PL)
S8	309-0407	P	REF	SWITCH-HSG FAN
S7	309-0179	A	REF	THERMOSTAT
S6	309-0486	P	REF	SWITCH-HI WATER TEMP
S5	309-0169	A	REF	SWITCH-OIL PRESSURE
S4	309-0104	A	REF	SWITCH-OIL PRESS
S3	166-0316	B	REF	BREAKER POINT ASSY (.025 GAP)
S2	309-0037	A	REF	SWITCH-TOGGLE (SPDT)
S1	309-0154	A	REF	SWITCH-TOGGLE (SPDT)
R5	304-0194	A	REF	RESISTOR-ADJ (50Ω, 25W)
R4	304-0121	A	REF	RESISTOR-FIXED (10Ω, 10W)
R3	304-0217	A	REF	RESISTOR-FIXED (1Ω, 10W)
R2	304-0003	A	REF	RESISTOR (5Ω, 50W)
R1	304-0175	A	REF	RESISTOR-ADJ
M1	205-0138	P	REF	FAN-GEN HSG
L2	322-0238	P	REF	LAMP-INDICATOR (GREEN-RUN)
L1	322-0283	P	REF	LAMP-INDICATOR (RED-SWITCH OFF)
K8	307-2067	C	REF	WATER SOLENOID ASSY
K7	320-0104	B	REF	SOLENOID-TIME DELAY LOW OIL PRESS
K6	307-1098	C	REF	SOLENOID-STOPPING DECOMPRESSION
K3,K4,K5	307-1886	P	REF	RELAY
K2	307-1817	B	REF	RELAY-PREHEAT SOLENOID
K1	307-1898	P	REF	SOLENOID-STARTER
J1	323-0184	P	REF	RECEPTACLE-DUPLEX (120V, 15A)
HTR-3	333-0209		REF	HEATER-FUEL LINE
HTR-2	154-0712	P	REF	HEATER-MANIFOLD
HTR-1	333-0103	B	REF	GLOW PLUG
G1	2008-0017	-	REF	GENERATOR ASSY-3JA1C1C
CB1	320-0979	P	REF	BREAKER-CIRCUIT (20A DC)
CR3	305-0546	P	REF	BRIDGE-RECTIFIER
CR1,CR2	357-0087	A	REF	RECTIFIER-SILICON (6A)
CB/SW	320-0825	B	REF	CIRCUIT BRKR/SWITCH (20A)
CB4	320-0976	P	REF	BREAKER-CIRCUIT (15A, GFCI)
CB2,CB3	320-0978	P	REF	BREAKER-CIRCUIT (15A)
BT1			REF	BATTERY-12V
A2	300-2369	C	REF	CONTROL PANEL ASSY
A1	300-2566	D	1	CONTROL ASSY
REF DES			QTY	DESCRIPTION OR MATERIAL

611-1163 D	RLW	11-4-81

Onan

CONTROL-GENSET (WD)

3.0 RDJA-AUX | 611-1163 | D

611-1163

612-5787 | DWG SIZE D

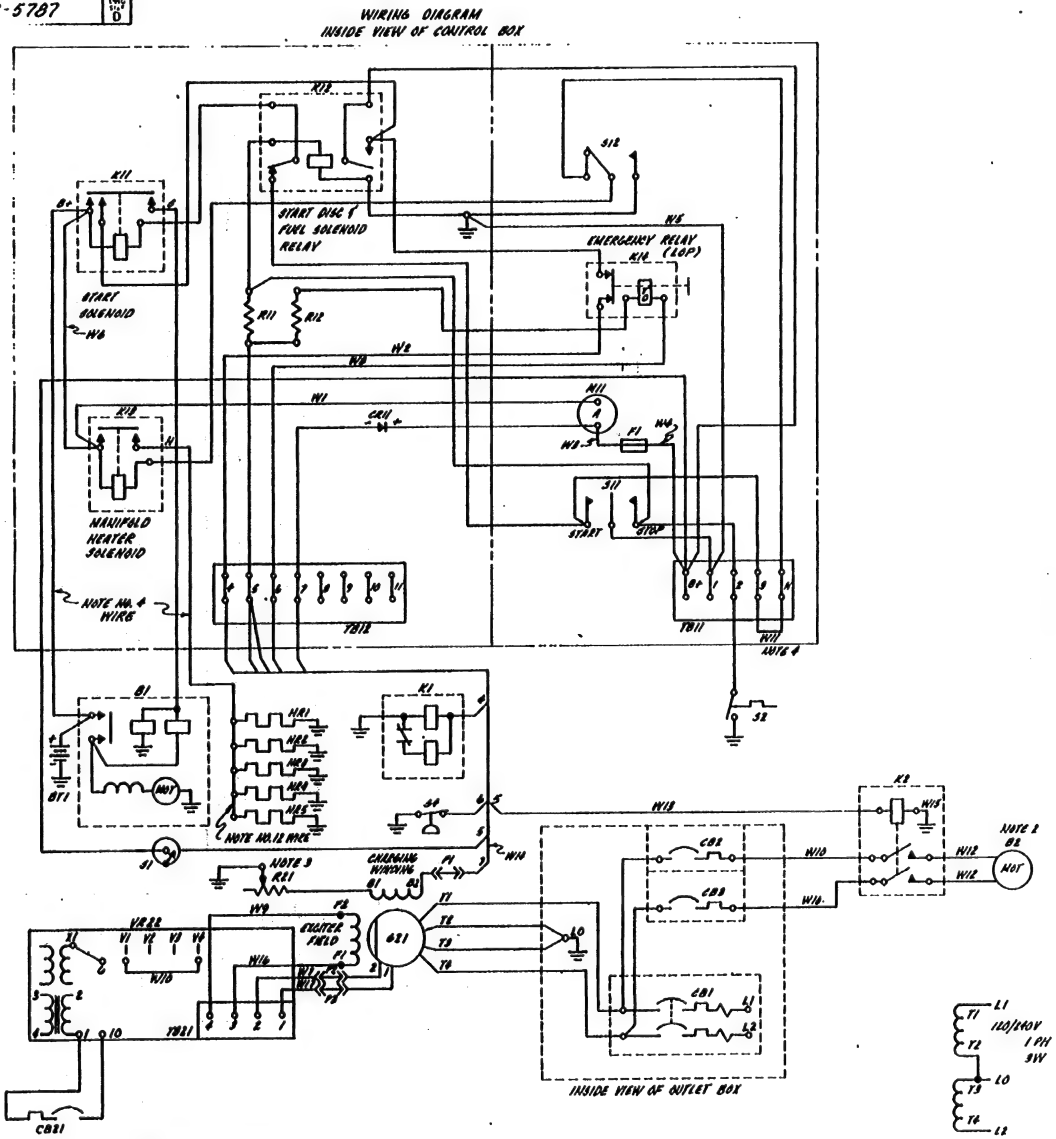

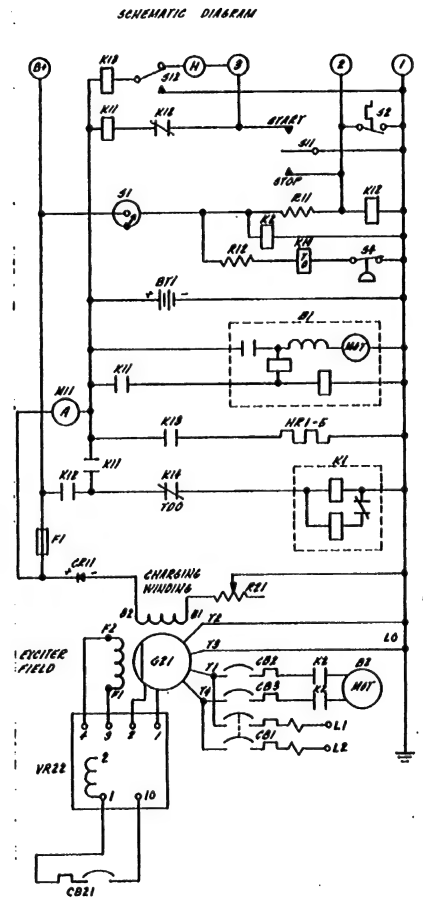

NOTES:
1. UNLESS OTHERWISE NOTED, ALL COMPONENTS ARE SHOWN IN THE DE-ENERGIZED POSITION.
2. MOTOR TO BE WIRED FOR CW ROTATION, HIGH VOLTAGE.
3. CHARGE RESISTOR TO BE MOUNTED IN GEN SET OUTLET DUCT.
4. REMOVE JUMPER WHEN REMOTE PRE-HEAT IS USED.

ENG PARTS LIST (REF)

REF DES	PART NO	REV LTR	QTY	DESCRIPTION
B1			1	STARTER & SOLENOID
BT1			1	BATTERY - 12V
HR1			1	HEATER - MANIFOLD
HR2-5			4	HEATER - GLOW PLUG (4 cyl.)
K1			1	SOLENOID - FUEL
S1			1	SWITCH - EMERGENCY
S2			1	SWITCH - HIGH TEMP
S4			1	SWITCH - LOW OIL PRESS

AC PARTS LIST

G21			1	GENERATOR
VR22	905-0889	D	1	REGULATOR ASSY - VOLTAGE
TB21			1	TERMINAL BLOCK

CONTROL BOX PARTS LIST

CR11	905-0496	A	1	RECTIFIER & LEAD ASSY
F1	811-0146	A	1	FUSE - 10A
	811-0125	A	1	HOLDER - FUSE
K11	907-0869	B	1	RELAY - START SOLENOID
K12	907-1227	B	1	RELAY & LEAD
K13	907-1066	B	1	RELAY - MANIFOLD HEATER
K14	910-0104	B	1	RELAY - EMERGENCY (LOP)
	510-0051	P	1	GROMMET
	882-0058	P	1	CLIP - WIRE
	508-0015	-	4	WASHER - FIBER
N11	802-0446	A	1	ANNUNCIATOR - CHAMPS 2-0-5
R11, 511	840-0997	B	1	SWITCH & RESISTOR ASSY
R12	804-0857	A	1	RESISTOR & LEAD ASSY
S12	840-0844	A	1	SWITCH & LEAD ASSY
TB11	882-0608	A	1	TERMINAL BLOCK
	882-0616	A	1	MARKER STRIP
TB12	882-0700	A	1	TERMINAL BLOCK
	882-0789	A	1	MARKER STRIP
W1	836-1466	A	1	LEAD ASSY
W2	836-2289	A	1	LEAD ASSY
W3	836-2571	A	1	LEAD ASSY
W4	836-2483	A	1	LEAD ASSY
W5	836-0179	A	1	LEAD ASSY
W6	832-0603	A	1	JUMPER
W8	836-0465	A	1	LEAD ASSY
W11	832-1053	A	1	JUMPER
	801-1981	A	1	FRAME - CONTROL BOX
	301-2119	C	1	CONTROL BOX
	301-2116	B	1	COVER - REGULATOR
	510-0082	P	1	GROMMET
	897-0036	A	1	GROUND STRAP
	98-1489	B	1	SILKSCREEN (AND LOW OIL & RESET)
	98-2170	B	1	SILKSCREEN (SCHEMATIC)
	510-0064	P	1	GROMMET
	801-0829	B	1	PANEL - COVER

CHASSIS PARTS LIST (REF)

P1,P2,P3			3	CONNECTOR
W7			1	LEAD
W9			1	LEAD
W10			2	LEAD
W12			2	LEAD
W13			1	LEAD
W14			1	LEAD
W15			1	LEAD
R21			1	RESISTOR ASSY
CB1			1	CIRCUIT BREAKER
CB2,CB3			2	CIRCUIT BREAKER
K2			1	RELAY - MOTOR
B2			1	MOTOR - AC (FAN)
W16			1	LEAD
W17			1	LEAD

3107	A	SEC ER. ADDED CB21	7-18-85
1399-8	-	RUSH FOR PROD	
22	LTR	REVISION	

OHAN DIVISION OF OHAN CORPORATION Minneapolis, Minnesota

DATE 1-29-80 DR. BUL

CONTROL - GEN SET (WIRING DIAGRAM)

612-5787 SIZE D

-01 12.0 ROJC-3CR/21680AC

612-5787

611-1166 C

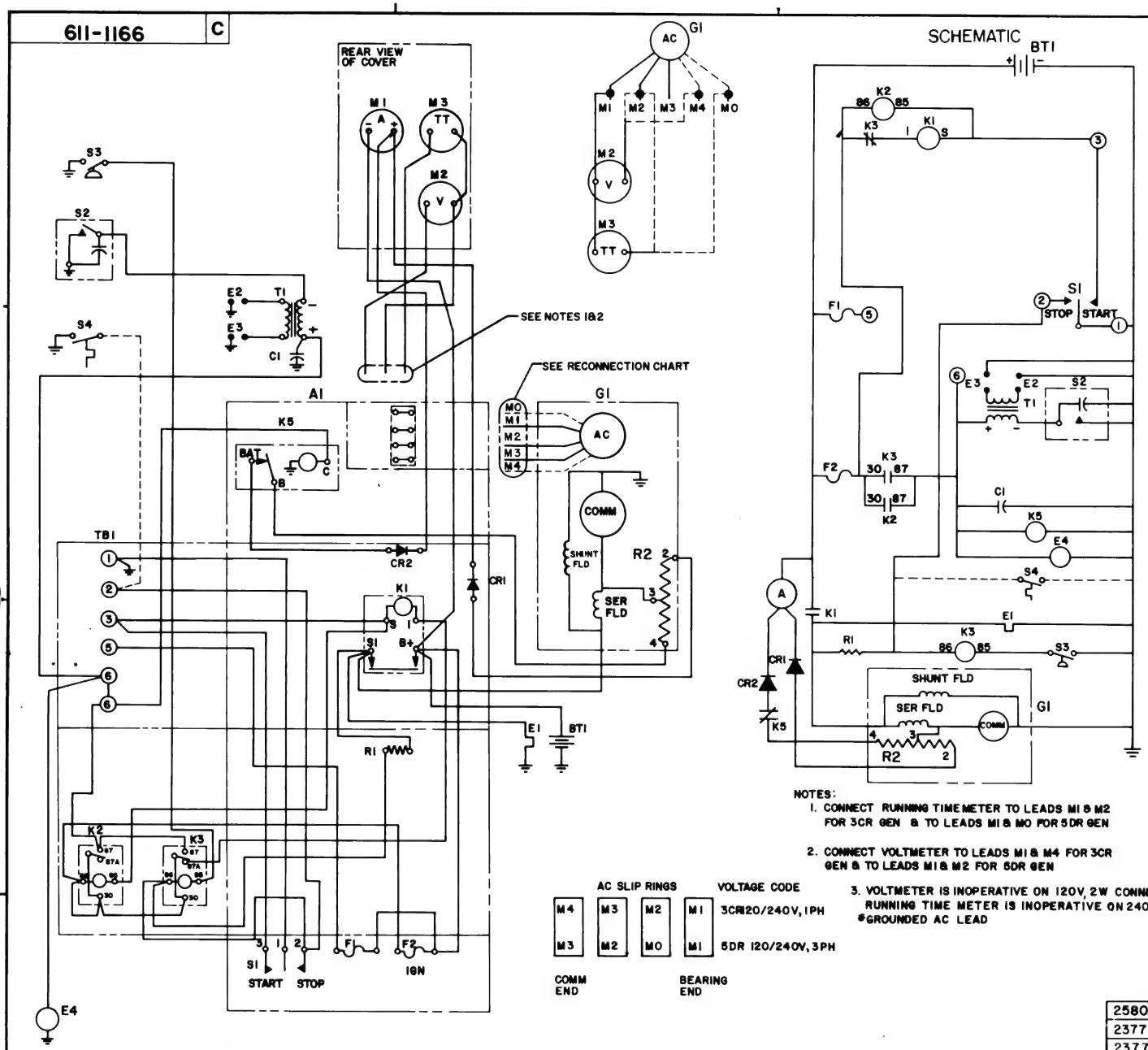

PARTS LIST

REF DES	PART NO.	PART RATE	QTY	DESCRIPTION
A1	300-2748	D	1	CONTROL ASSY -01
	ALL PARTS LISTED BELOW ARE REF ONLY			
BT1			1	BATTERY - 12VOLT
C1	312-0050	A	1	CAPACITOR
CR1,2	357-0030	P	2	RECTIFIER (BATT CHARGING)
E1			1	CHOKE - ONAN
E2, 3			2	SPARK-PLUG
E4	149-1547	B	1	FUEL PUMP (OR FUEL SOLENOID)
F1, 2	321-0175	P	2	FUSE HOLDER
	321-0174		2	FUSE - 5 AMP 32 VOLT
G1				GENERATOR
K1	307-1617	B	1	START SOLENOID
K2	307-1575	P	1	RELAY - CRANK IGNITION
K3	307-1575	P	1	RELAY - RUN IGNITION
R1	352-0161	P	1	RESISTOR - 100 ohm 5W
R2				RESISTOR
K5		P	1	RELAY - CHARGE
S1	308-0383	A	1	SWITCH - START STOP
S2			1	SWITCH - BREAKER & CAP ASSY
S3			1	SWITCH - LOW OIL PRESS
T1	166-0643	C	1	COIL - IGNITION
TB1	332-0699	A	1	TERMINAL - BLOCK
S4			1	SWITCH HIGH AIR TEMP (WHEN USED)
M1	302-0058	A	1	AMMETER - DC
M2	302-0551	P	1	AC - VOLTMETER
M3	302-0787	A	1	METER - TIME TOTALIZING
	98-5010	B	1	SILKSCREEN - WIRING DIAG

611-1166 C

ER NO.	LET	NO.	REVISION	ENGR	CKR	DATE
25801	C	1	FUEL PUMP WAS 149-1542		RW	1-30-85
23772	B	2	K1-1 WAS K1-B+	WH	RW	2-7-84
23772	B	1	LEAD CR2 WAS TO M1-	WH	RW	2-7-84
21306	—		RLSE FOR PROD			

RECONNECTION CHART 1PH 4W (SEE NOTE 3)

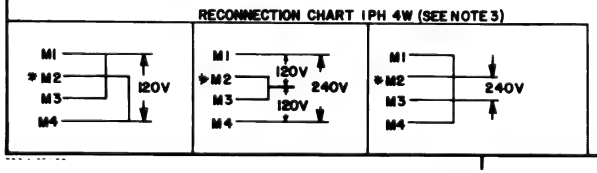

TOLERANCES UNLESS OTHERWISE SPECIFIED		NEXT ASSY	C
mm	INCH	SIM TO 611-1142	C
X. ± .X ± .XX ±	.XX ± .XXX ± .XXXX ±	Third Angle Projection	
+0.15 −0.05	HOLES +.006 −.002	The proprietary design information on this print is owned by Onan Corporation. Conveyance of this right is not extended to others.	
ANGLES ±	SCALE		

611-1166 C

SEPIA FROM	INITIAL	DATE
DR	JC	11-2-82
CKR	RW	1-13-83
ENGR	WHH	1-6-83
SAMP REL		
PROD REL	WHH	1-6-83
PROD REL		

SEC PUR ME QC PO M

Onan Corporation
Minneapolis Minnesota

TITLE CONTROL - GEN SET (WIRING DIAGram)

MODEL 6.5NH- 5DR/10000P 3CR/10000P

DWG NO. 611-1166

DWG SIZE C

611-1167 REV C

WIRING DIAGRAM

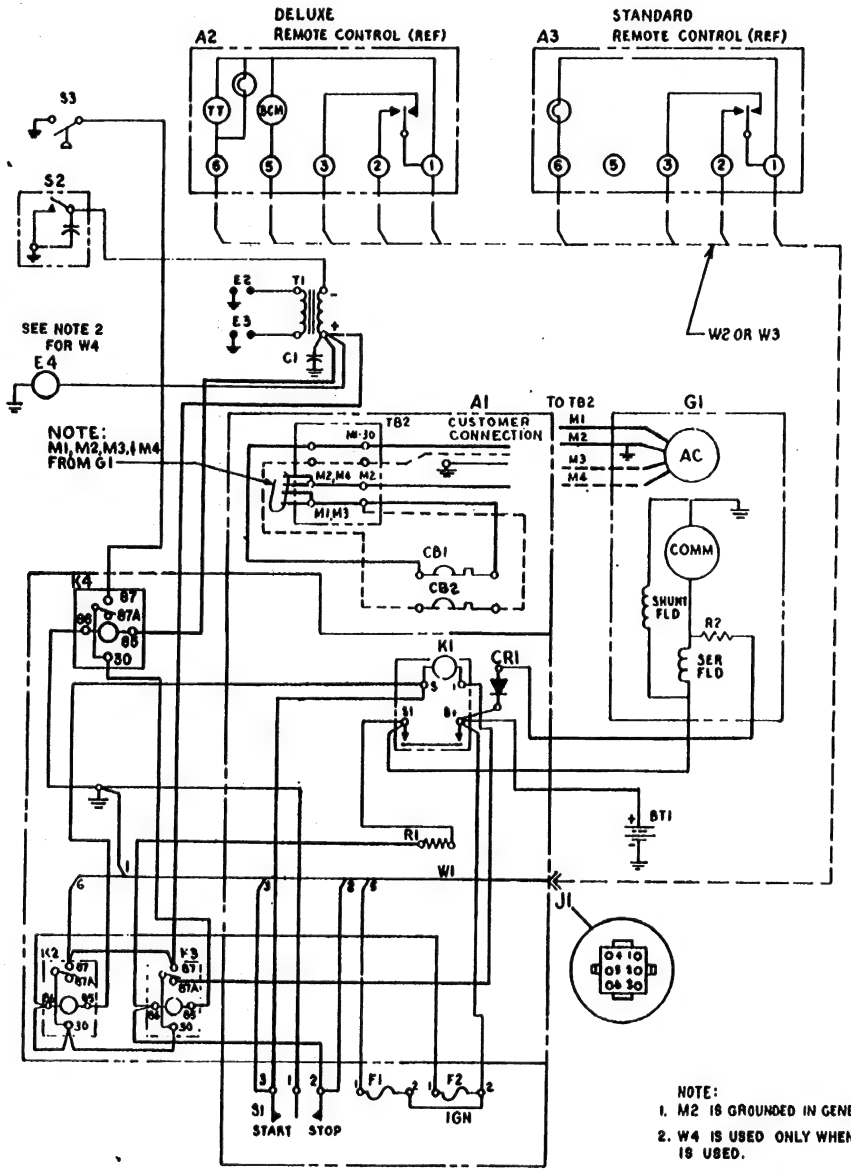

SCHEMATIC

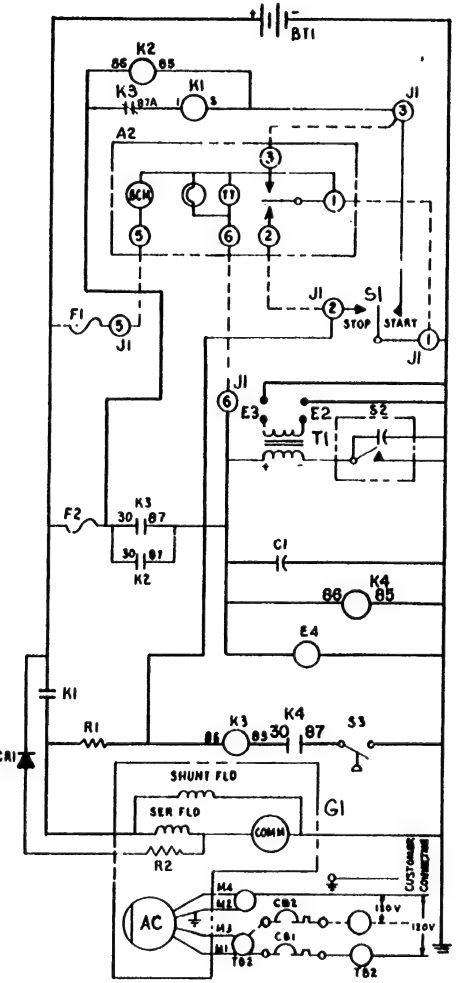

ALL PART NOS LISTED ARE REF ONLY

* WHEN USED

NOTE:
1. M2 IS GROUNDED IN GENERATOR
2. W4 IS USED ONLY WHEN SHUTOFF/FILTER IS USED.

PARTS LIST

REF DES	PART NO.	REV LTR	QTY	DESCRIPTION
	300-2875	D	1	CONTROL ASSY (-01) 30 AMP
	300-2874	D	1	CONTROL ASSY (-02)(2) 30 AMP
A2	300-0986	B	1	DELUXE REMOTE CONTROL
A3	300-0985	B	1	STANDARD REMOTE CONTROL
BT1			1	BATTERY - 12V
C1	312-0050	A	1	CAPACITOR
CR1	357-0030	P	1	RECTIFIER (BATT. CHARGING)
E1			1	CHOKE - ONAN (NOT USED WITH LPG)
E2, 3			2	SPARK - PLUG
E4			1	FUEL PUMP OR SHUTOFF/FILTER-LPG
F1, 2	321-0175	P	2	FUSE HOLDER
	321-0174		2	FUSE - 5 AMP 32V
G1			1	GENERATOR
K1	307-1617	B	1	START SOLENOID
K2	307-1575	P	1	RELAY - CRANK IGNITION
K3	307-1575	P	1	RELAY - RUN IGNITION
R1	304-0431	P	1	RESISTOR - 150 ohm 5W
R2				RESISTOR
K4	307-1575	P	1	RELAY
J1	323-0440	C	1	SOCKET PLUG-REMOTE
S1	308-0383	A	1	SWITCH - START STOP
S2			1	SWITCH - BREAKER & CAP ASSY
S3			1	SWITCH - LOW OIL PRESS
T1	166-0643	C	1	COIL - IGNITION
TB2	332-0254	A	1	TERMINAL BOARD
	98-5242	B	1	SILKSCREEN - SCHEMATIC
CB1	320-0544	C	1	CIRCUIT BREAKER 30 AMP (-01,02)
CB2	320-0544	C	1	CIRCUIT BREAKER 30 AMP (-02)
W1	338-1078	C	1	WIRING HARNESS (CONN-REMOTE)
W2	338-1080	C	1	WIRING HARNESS (CABLE-REMOTE CONTROL) (10 FEET LONG)
W3	338-1081	C	1	WIRING HARNESS (CABLE-REMOTE CONTROL) (30 FEET LONG)
W4	336-9679	A	1	LEAD ASSY (SHUTOFF/FLTR ONLY)

611-1167

THIS DOCUMENT SUBJECT TO FOLLOWING STANDARDS/CODES: ☒ UL ☒ CSA ☐ ____ ☐ ____
TO MAINTAIN THIS COMPLIANCE, NO CHANGES OR DEVIATIONS TO BE MADE W/O APPROVAL OF: CODES & STDS ENGR. ☒ USPP ☒ IPP ☐ RD&D
SIGNED DATE

-01	4.0BGAL-1R/16013/C	
-02	6.3NHL-3CR/16013/P	

120/240 4W 1PH 60HZ

LET	REVISION		DATE
—	PROD RLSE ERNO 23158		10-27-83

ONAN DIVISION OF ONAN CORPORATION Minneapolis, Minnesota

DATE 10-17-83 DR JC CHK WMK APR RW

CONTROL - GEN SET (WIRING DIAGRAM)

DWG 611-1146 SIZE D 611-1167 REV C

5.0BGA, 6.5 NH RECONNECTION CHART

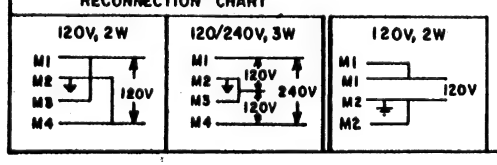

611-1169 | DWG SIZE C

WIRING DIAGRAM

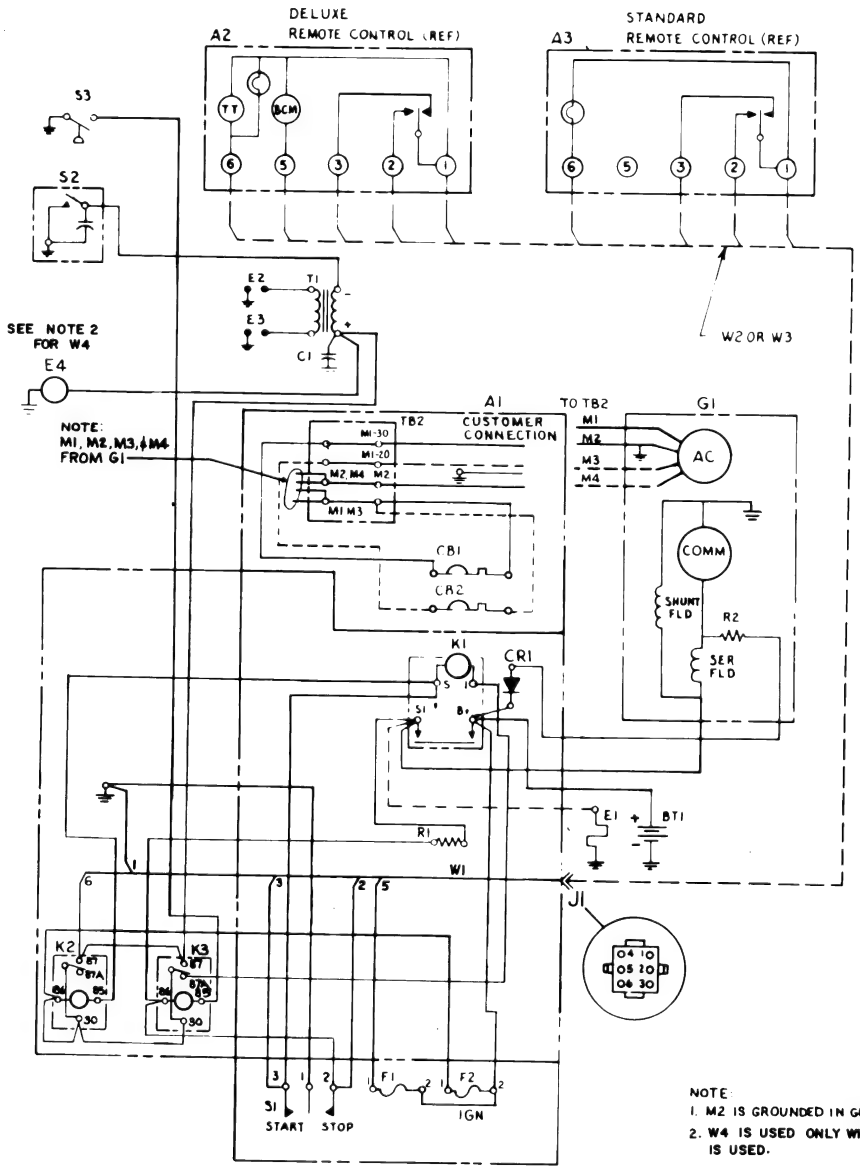

SCHEMATIC

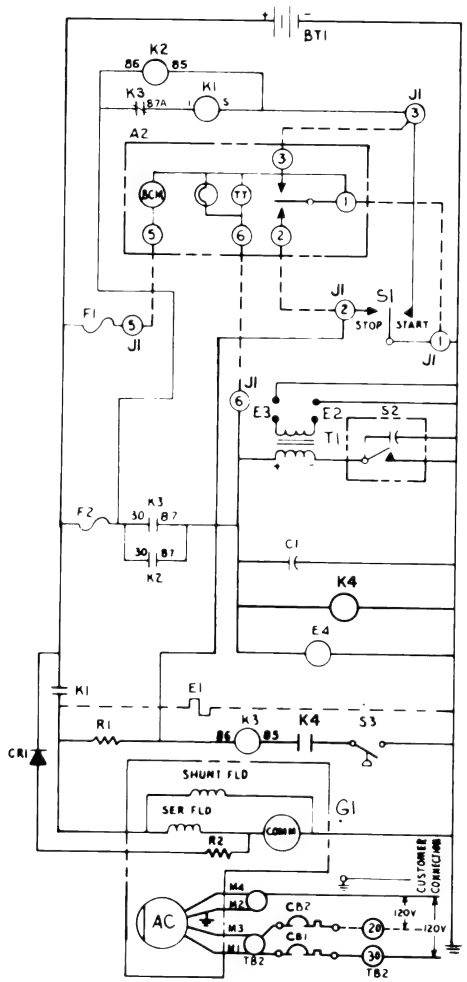

NOTE:
1. M2 IS GROUNDED IN GENERATOR
2. W4 IS USED ONLY WHEN SHUTOFF / FILTER IS USED.

PARTS LIST				
REF DES	PART NO	DWG SIZE	QTY	DESCRIPTION
	300-2708	D	1	CONTROL ASSY -01
	300-2709	D	1	CONTROL ASSY -02
ALL PART NOS LISTED BELOW ARE REF ONLY				
A2	300-0986	B	1	DELUXE REMOTE CONTROL
A3	300-0985	B	1	STANDARD REMOTE CONTROL
BT1			1	BATTERY - 12V
C1	312-0050	A	1	CAPACITOR
CB1	320-0544	C	1	CIRCUIT BREAKER 30AMP (-01, -02)
CB2	320-0544	A	1	CIRCUIT BREAKER 30AMP (-02)
CR1	357-0030	P	1	RECTIFIER (BATT. CHARGING)
E1			1	CHOKE - ONAN (NOT USED WITH LPG)
E2, 3			2	SPARK - PLUG
E4			1	FUEL PUMP OR SHUTOFF / FILTER LPG
F1, 2	321-0175	P	2	FUSE HOLDER
	321-0174		2	FUSE 5 AMP 32V
G1			1	GENERATOR
K1	307-1617	B	1	START SOLENOID
K2	307-1575	P	1	RELAY CRANK IGNITION
K3	307-1575	P	1	RELAY RUN IGNITION
R1	304-0431	P	1	RESISTOR 150 ohm 5W
R2				RESISTOR
J1	323-0440	C	1	SOCKET PLUG REMOTE
S1	308-0383	A	1	SWITCH START, STOP
S2			1	SWITCH BREAKER & CAP ASSY
S3			1	SWITCH LOW OIL PRESS
T1	166-0643	C	1	COIL - IGNITION
	98-5242	B	1	SILKSCREEN - SCHEMATIC
TB2	332-0254	A	1	TERMINAL BOARD
* #1	338-1078	C	1	WIRING HARNESS (CONN REMOTE)
* #2	338-1080	C	1	WIRING HARNESS (CABLE REMOTE CONTROL) (10 FEET LONG)
* #3	338-1081	C	1	WIRING HARNESS (CABLE-REMOTE CONTROL) (30 FEET LONG)
W4	336-9679	A	1	LEAD ASSY (SHUTOFF/FLTR ONLY)

611-1169

* WHEN USED

5.0BGA, 6.5NH RECONNECTION CHART

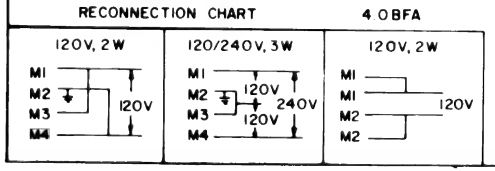

THIS DOCUMENT SUBJECT TO FOLLOWING STANDARDS/CODES: ☒ UL ☒ CSA ☐ ____ ☐ ____
TO MAINTAIN THIS COMPLIANCE, NO CHANGES OR DEVIATIONS TO BE MADE W/O APPROVAL OF CODES & STDS ENGR. ☒ USPP ☒ IPP ☐ RD&D
SIGNED: RMB DATE: 11-8-83

-01 4.0BGAL-IR/16014C
-02 6.3NHL-3CR/16014P

WMJ6 11-28-83

120 V 1 PH 4 W 60 Hz

ME SS

23158 — PROD RLSE
ER NO. LET REVISION ENGR CHK DATE

ONAN DIVISION OF ONAN CORPORATION Minneapolis, Minnesota
DATE 11-8-83 DR JC TRACE WR CHK RW
CONTROL GEN SET (WIRING DIAGRAM)
DEPT. FROM 611-1147 DWG 611-1169 SIZE C

611-1170 REV C

WIRING DIAGRAM

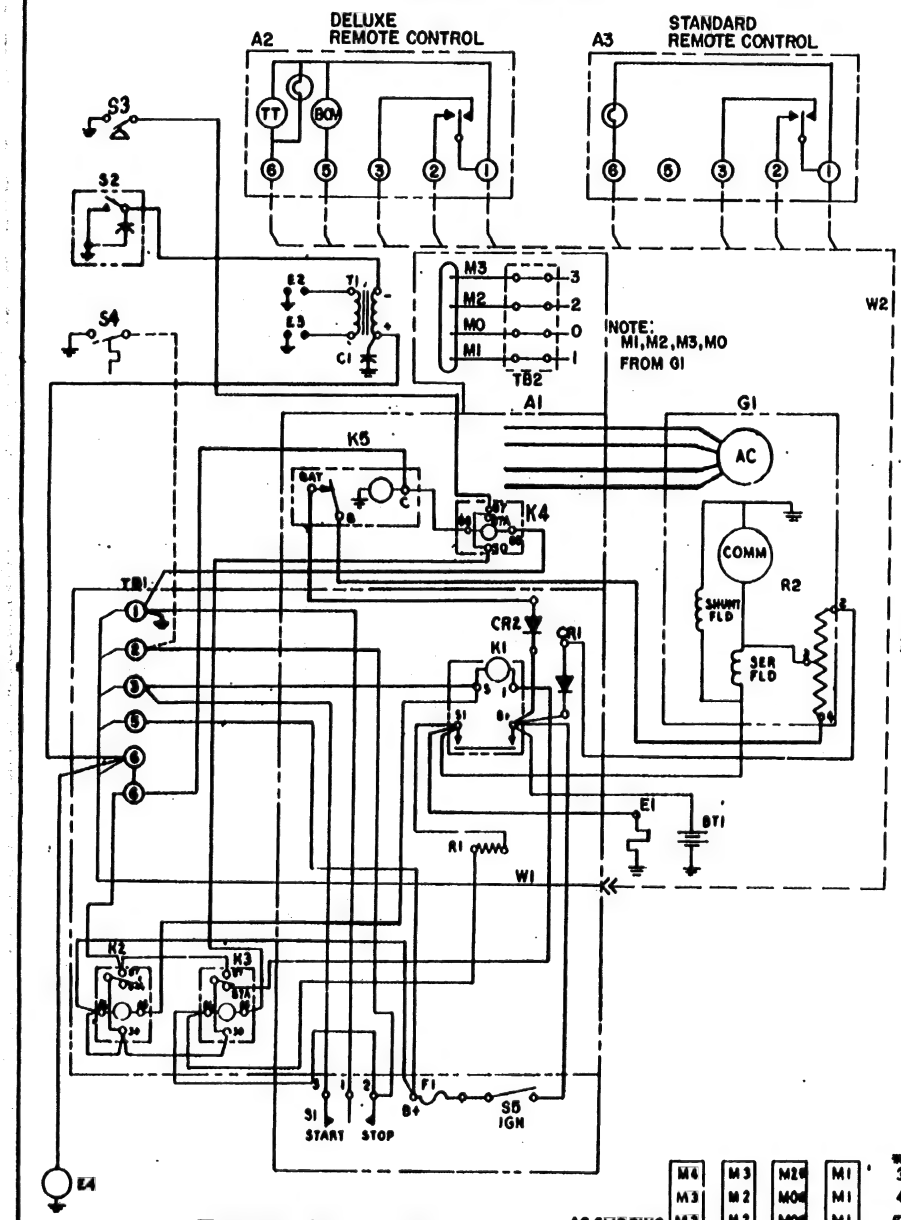

SCHEMATIC 98-5289

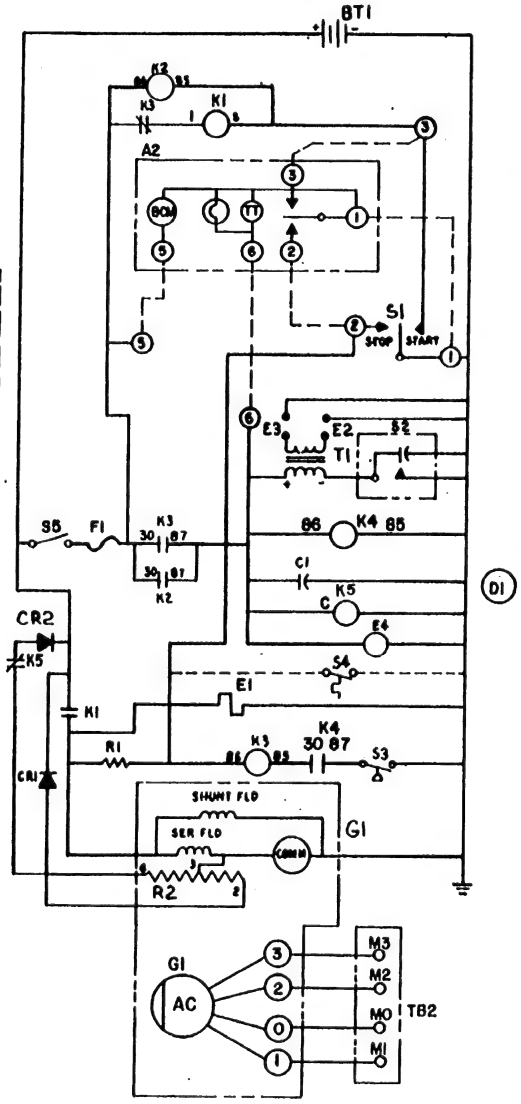

PARTS LIST

REF DES	PART NO.	REV LTR	QTY	DESCRIPTION
A1	300-2907	D	1	CONTROL ASSY (-01)
	ALL PART NOS LISTED BELOW ARE REF ONLY			
BT1			1	BATTERY - 12V
C1	312-0050	A	1	CAPACITOR
CR1,2	357-0030	P	2	RECTIFIER (BATT. CHARGING)
E1			1	CHOKE - ONAN
E2, 3			2	SPARK - PLUG
E4	149-1542		1	FUEL PUMP (-01) OR FUEL SOLENOID
F1	321-0175	P	1	FUSE HOLDER
	321-0146		1	FUSE - 10 AMP 32V
G1			1	GENERATOR
K1	307-1617	B	1	START SOLENOID
K2	307-1575	P	1	RELAY - CRANK IGNITION
K3	307-1575	P	1	RELAY - RUN IGNITION
R1	352-0161	P	1	RESISTOR - 100 ohm 5W
R2				RESISTOR
K5		P	1	RELAY-CHARGE
K4	307-1576	A	1	RELAY
K6				FUEL-SOLENOID (NAT GAS ONLY)
S1	309-0383	A	1	SWITCH - START, STOP
S2			1	SWITCH - BREAKER & CAP ASSY
S3			1	SWITCH - LOW OIL PRESS
T1	166-0843	C	1	COIL - IGNITION
TB1	332-0699	A	1	TERMINAL BLOCK
TB2	332-0254	A	1	TERMINAL BLOCK
S4			1	SWITCH-HIGH AIR TEMP
S5			1	SWITCH-B+ (ON-OFF)
W1	338-1078	C	1	WIRING HARNESS (CONN-REMOTE)
W2	338-1821	B	1	WIRING HARNESS (CABLE-REMOTE)

611-1170

24560	D	1	ADDED 332-0254	WH RW 6-26-84
24390	C	1	ADDED E1, CHOKE	WH RW 5-15-84
24091	B	1	WAS 5D 120/360V,3PH	WH RW 3-20-84
23800	-		PROD RLSE	
ERNO.	REV LTR	No.	REVISION	DATE

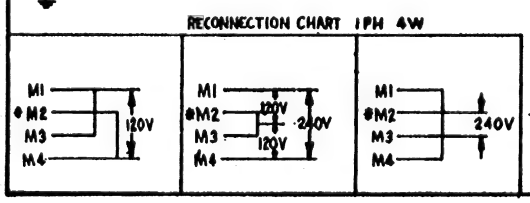

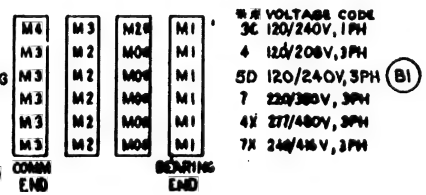

* # VOLTAGE CODE
3C 120/240V, 1PH
4 120/208V, 3PH
5D 120/240V, 3PH
7 220/380V, 3PH
4X 277/480V, 3PH
7X 240/416V, 3PH

* GROUNDED AC LEAD

-01 6.5 NH-5DR/26725P

120/240 V 3PH 4W 60 Hz

2-16-84 RLW WH

DIVISION OF ONAN CORPORATION Minneapolis, Minnesota

CONTROL - GEN SET (WIRING DIAGRAM)

611-1168 611-1170 REV C

611-1174 C

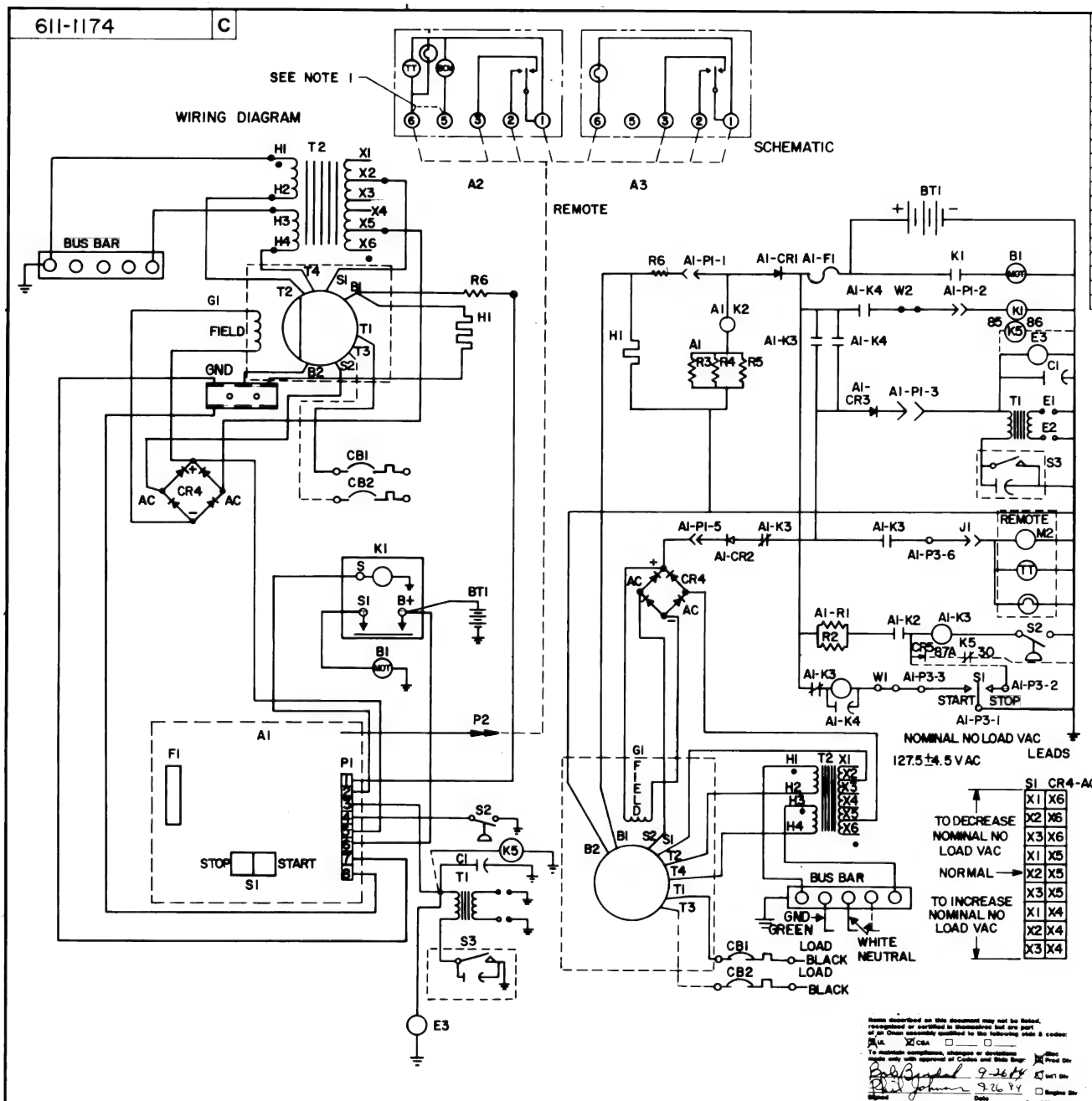

ER No.	Ltr	No.	Revision	Zone	Dr	Chkr	Approved	Date
25100	A	1	RLSE FOR PROD		JC	KW	WMX	9-19-84

NOTES:

1. JUMPER IS NEEDED FOR BATTERY CONDITION METER

611-1174 C

W1,2				JUMPER-WIRE
T2				TRANSFORMER
T1				IGN COIL
S3				IGN POINTS
S2				SWITCH- LOW OIL PRESSURE
S1				SWITCH-START/STOP
R6				RESISTOR-BATTERY CHARGE
K5				RELAY-USED WITH LPG ONLY
K1				START SOLENOID
H1				CHOKE
G1				GENERATOR
F1				FUSE
E3				FUEL PUMP/OR FUEL SOLENOID
E1,2				SPARK PLUG
CB1,2				CIRCUIT BREAKER (AC OUTPUT)
CR4				BRIDGE RECTIFIER
CR5				RECTIFIER-USED WITH LPG ONLY
C1				CAPACITOR
BT1				BATTERY 12V
B1				STARTER
A3				STANDARD REMOTE CONTROL
A2				DELUXE REMOTE CONTROL
A1	300-2878	C	REF	CONTROL ASSY
Ref Des	Item	Part No.	*Bulk	Dwg Size	Qty	Description or Material

Items described on this document may not be listed, recognized or certified in themselves but are part of an Onan assembly qualified by the following mark & codes:
☐ UL ☒ CSA ☐ ____ ☐ ____
To maintain compliance, changes or deviations require only with approval of Codes and State Reqs.
Bob Byfield 9-26-84 Prod Dev
Bob Johnson 9-26-84 Engine Dev
Approved Date

Do Not Scale Print

Tolerances unless otherwise specified

mm	Inch
X. ±	.X ±
.X ±	.XX ±
.XX ±	.XXX ±
Machined Holes ≤ .5 in (13 mm)	
+0.15	+.006
−0.05	−.002

Angles ±

Sim to
Copied from
Third Angle Projection

This document is the property of Onan Corp. It contains proprietary and confidential information which must not be duplicated, used, or disclosed other than as expressly authorized by Onan Corp. or its representative

Drawn to scale of NONE

611-1174 C

	Name	Date
Dr	JIM CAMERON	8-1-84
Chkr	K. WALTZ	9-19-84
Approved	Wm Hopper	9-19-84

For interpretation of dimensioning and tolerancing, see ANSI Y14.5M-1982

Model first used on EMERALD

Onan Corporation Minneapolis, Minnesota

Title CONTROL-GEN SET (WD)

Dwg No. 611-1174 Dwg Size C

611-1176 C

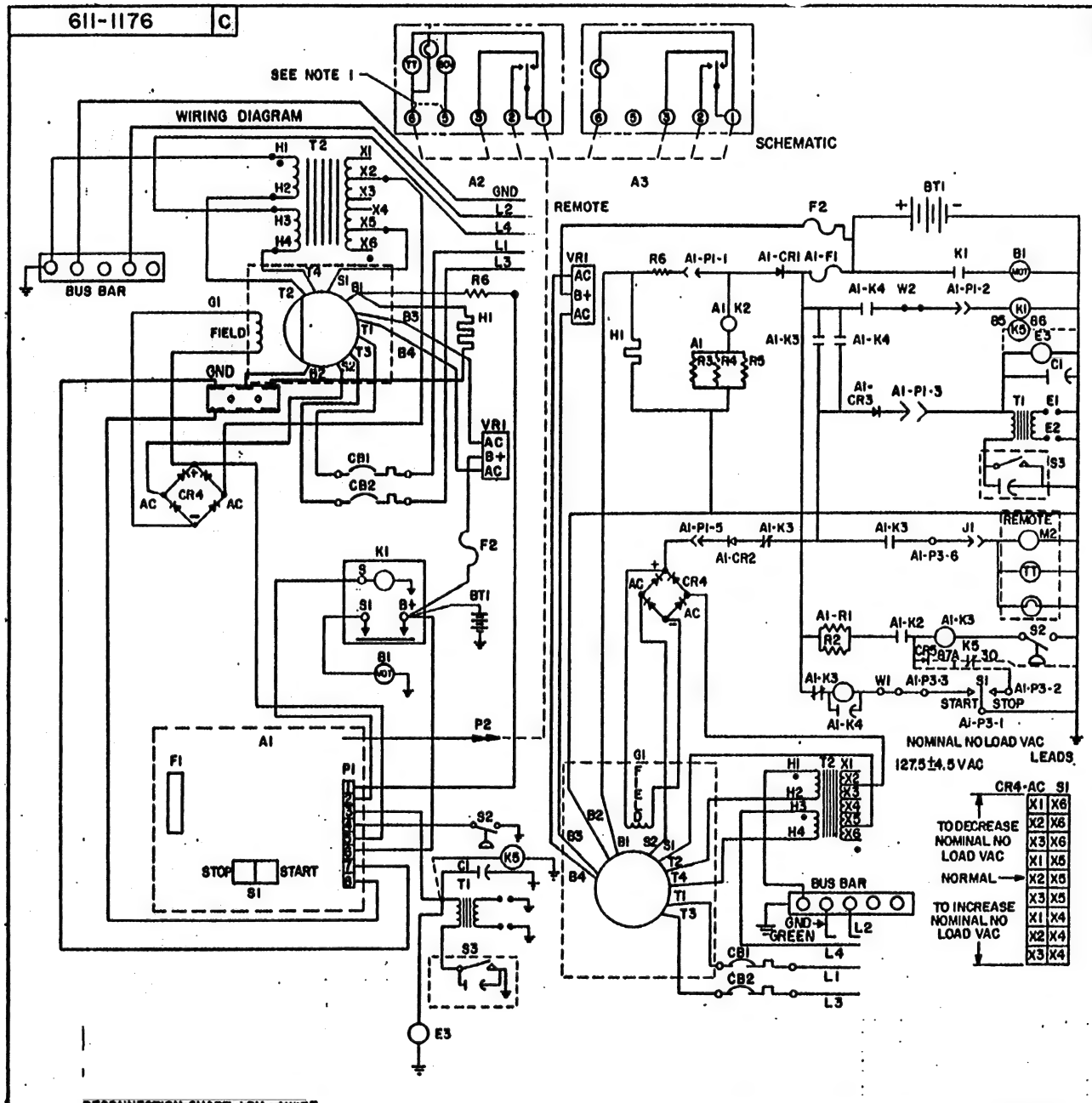

ER No	Ltr	No	Revision	Zone	Dr	Chkr	Approved	Date
28368	A	1	RLSE FOR PROD	–	JC	RJ	WHX	3-21-85
28696	B	1	ADD B3, B4	3-C	JC	RJ	WHX	9-17-86

NOTES:

1. JUMPER IS NEEDED FOR BATTERY CONDITION METER

611-1176 C

F2				INLINE FUSE
VR1				VOLTAGE REGULATOR 12VDC
W1,2				JUMPER-WIRE
T2				TRANSFORMER
T1				IGN COIL
S3				IGN POINTS
S2				SWITCH- LOW OIL PRESSURE
S1				SWITCH-START/STOP
R6				RESISTOR-BATTERY CHARGE
K5				RELAY-WHEN USED
K1				START SOLENOID
H1				CHOKE
G1				GENERATOR
F1				FUSE
E3				FUEL PUMP
E1,2				SPARK PLUG
CB1,2				CIRCUIT BREAKER (AC OUTPUT)
CR4				BRIDGE RECTIFIER
CR5				RECTIFIER-WHEN USED
C1				CAPACITOR
BT1				BATTERY 12V
B1				STARTER
A3				STANDARD REMOTE CONTROL
A2				DELUXE REMOTE CONTROL
A1	300-2878	C	REF	CONTROL ASSY
Item	Part No.	*Sub	Qty Req	Qty	Description or Material

Do Not Scale Print

Tolerances unless otherwise specified: mm .X ± .X ± .XX ± Machined Holes ±.0 in (19 mm) +0.15 −0.05; Inch .X ± .XX ± .XXX ± +.005 −.002; Angles ±

Drawn to scale of NONE

Scale

Copied from

Third Angle Projection

This document is the property of Onan Corp. It contains proprietary and confidential information which must not be duplicated, used, or disclosed other than as expressly authorized by Onan Corp. or its representative

For interpretation of dimensioning and tolerances, use ANSI Y14.5M-1982

Model first used on 4.0 BGE-3CR/28202B

	Name	Date
Dr	JIM CAMERON	5-20-85
Chkr	R. WALTZ	5-22-85
Approved	Wm Hoover	5-22-85

Onan Corporation Minneapolis, Minnesota

Title: CONTROL-GEN SET (WD)

Dwg No. 611-1176 Rev C

611-1176 C

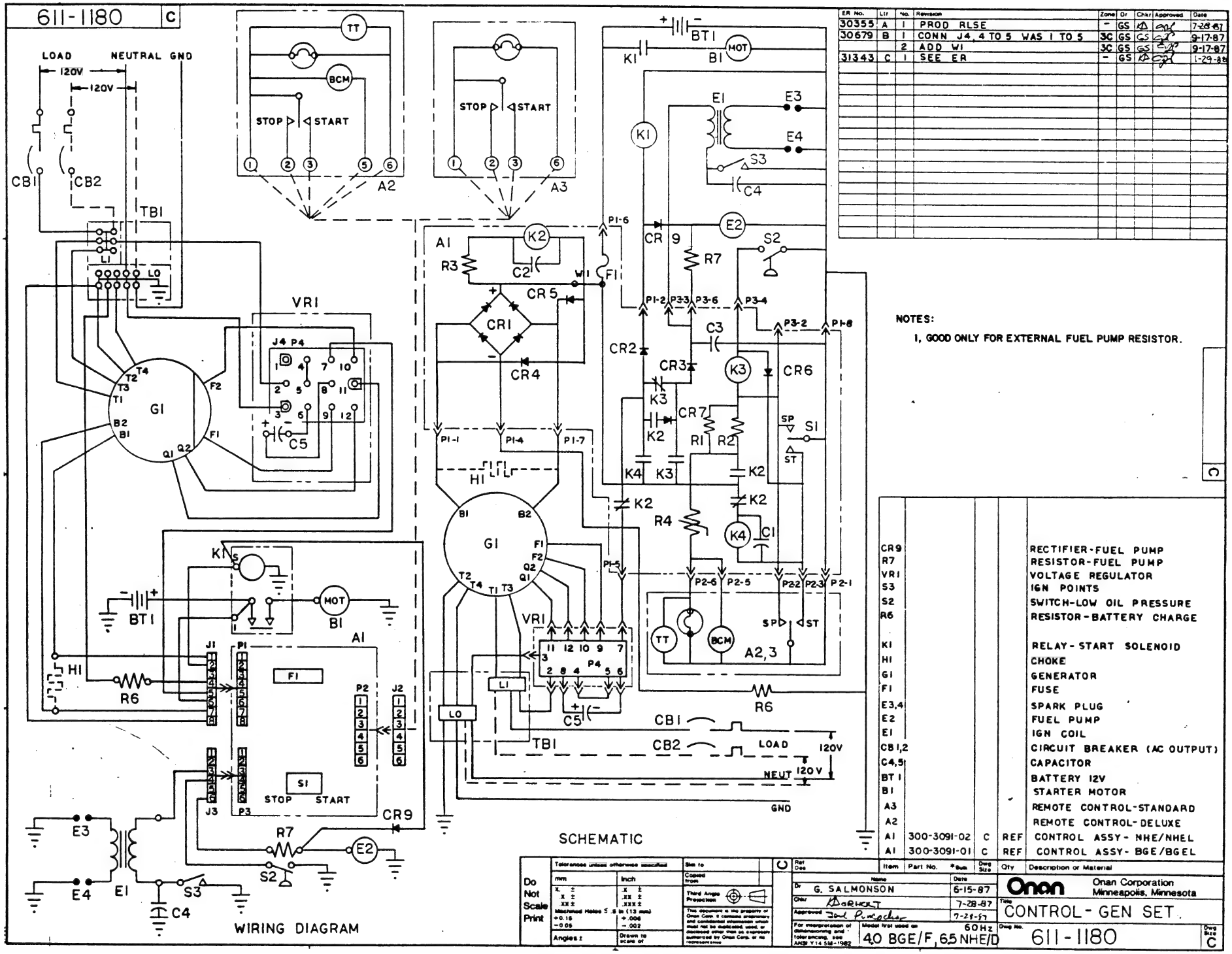

ER No.	Ltr	No.	Revision	Zone	Dr	Chkr	Approved	Date
30355	A	1	PROD RLSE	–	GS			7-28-87
30679	B	1	CONN J4, 4 TO 5 WAS 1 TO 5	3C	GS	GS		9-17-87
		2	ADD W1	3C	GS	GS		9-17-87
31343	C	1	SEE ER	–	GS			1-29-88

NOTES:

1. GOOD ONLY FOR EXTERNAL FUEL PUMP RESISTOR.

Item	Part No.	*Sub	Dwg Size	Qty	Description or Material
CR9					RECTIFIER-FUEL PUMP
R7					RESISTOR-FUEL PUMP
VR1					VOLTAGE REGULATOR
S3					IGN POINTS
S2					SWITCH-LOW OIL PRESSURE
R6					RESISTOR-BATTERY CHARGE
K1					RELAY-START SOLENOID
HI					CHOKE
G1					GENERATOR
F1					FUSE
E3,4					SPARK PLUG
E2					FUEL PUMP
E1					IGN COIL
CB1,2					CIRCUIT BREAKER (AC OUTPUT)
C4,5					CAPACITOR
BT1					BATTERY 12V
B1					STARTER MOTOR
A3					REMOTE CONTROL-STANDARD
A2					REMOTE CONTROL-DELUXE
A1	300-3091-02	C	REF		CONTROL ASSY-NHE/NHEL
A1	300-3091-01	C	REF		CONTROL ASSY-BGE/BGEL

Do Not Scale Print

Tolerances unless otherwise specified: mm X ± / X ± / XX ± / Machined Holes ≤ .8 in (13 mm) +0.15 −0.05; Inch X ± / .XX ± / .XXX ± / + .006 − .002; Angles ±

Scale: Sheet of; Drawn to scale of

Copied from; Third Angle Projection

This document is the property of Onan Corp. It contains proprietary and confidential information which must not be duplicated, used, or disclosed either than as expressly authorized by Onan Corp. or its representative.

Ref Des

Name	Date
Dr G. SALMONSON	6-15-87
Chkr	7-28-87
Approved	7-28-87

For interpretation of dimensioning and tolerancing, see ANSI Y14.5M-1982

Model first used on 4.0 BGE/F, 6.5 NHE/D 60 Hz

Onan Corporation Minneapolis, Minnesota

Title: CONTROL-GEN SET

Dwg No. 611-1180 Dwg Size C

611-1182 C

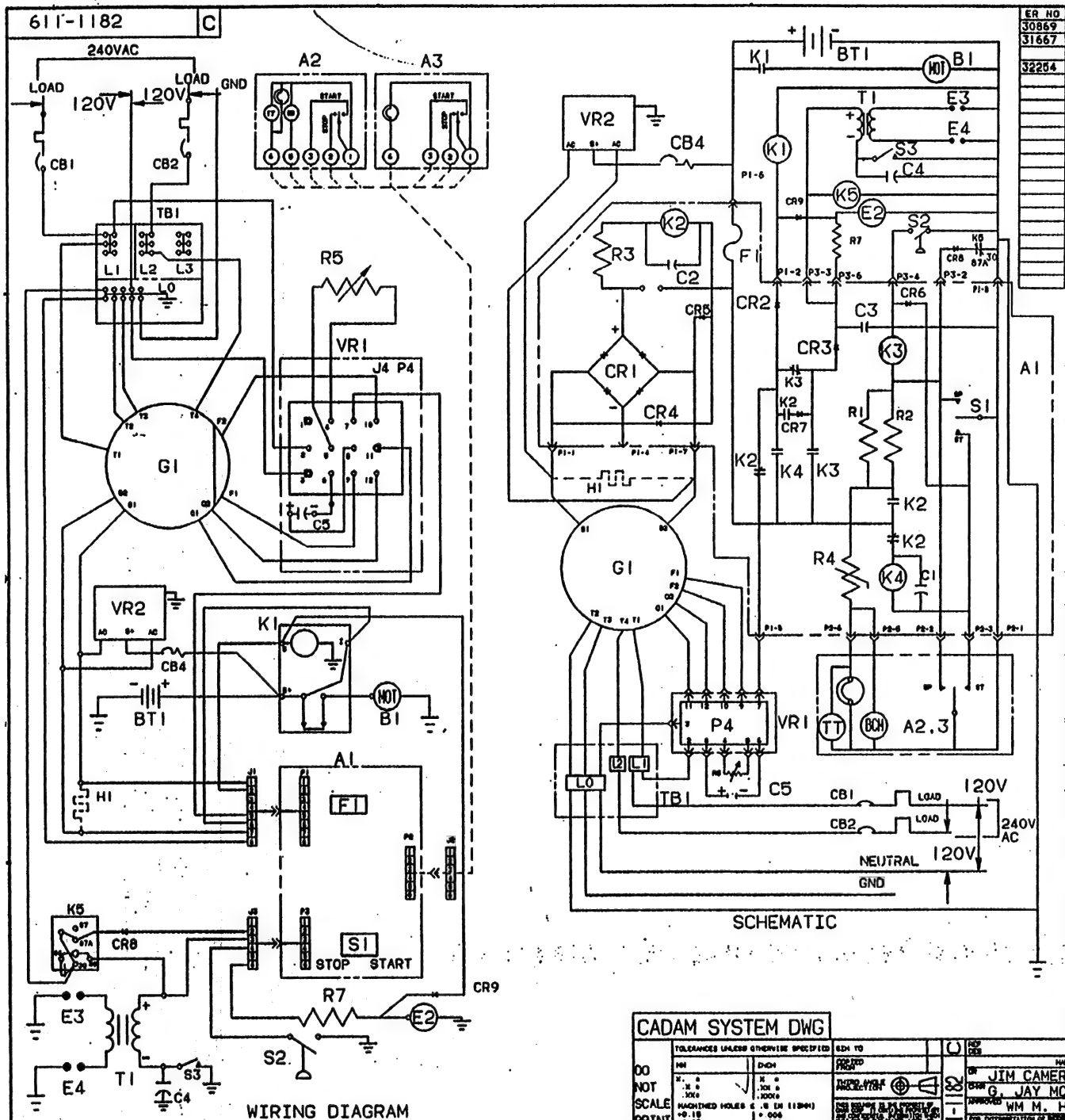

ER NO	LTR	NO	REVISION	ZONE	DR	CKHR	APPROVED	DATE
30869	A	1	PRODUCTION RELEASE	-	JC	RW	WMH	10-26-87
31667	B	1	ADD R7 & R5 & RECONN CHART	-	JC	RW	WMH	3-8-88
		2	TB1 WAS 2 PL TERMINAL BLOCK	4-D	JC	RW	WMH	3-8-88
32254	C	1	CB4 WAS F2	-	JC	GS	WMH	6-3-88

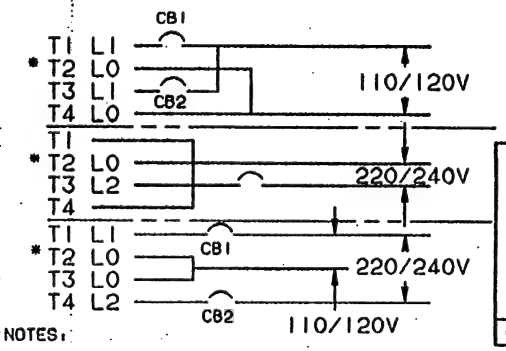

NOTES:
1. *GROUNDED AC LEAD

611-1182 C

R5				POTENTIOMETER
R7				RESISTOR FUEL PUMP
CB4				CIRCUIT BREAKER(THERMAL)
VR2				VOLTAGE REGULATOR (DC)
CR8				RECTIFIER
VR1				VOLTAGE REGULATOR(AC)
S3				IGN POINTS
S2				SWITCH-LOW OIL PRESS
K5				RELAY
K1				RELAY-START SOLENOID
H1				CHOKE-GASOLINE ONLY
G1				GENERATOR
F1				FUSE-SLOW BLOW 5A
E3,4				SPARK PLUGS
E2				FUEL PUMP OR FUEL SOL
T1				IGN COIL
CB1,2				CIRCUIT BREAKER (AC OUTPUT)
C4,5				CAPACITOR
BT1				BATTERY 12V
B1				STARTER MOTOR
A3				REMOTE CONTROL-STANDARD
A2				REMOTE CONTROL-DELUXE
A1	300-3339-4,5,6,7	C	REF	CONTROL ASSY-NHD/NHDL
A1	300-3339-1,2,3	C	REF	CONTROL ASSY-BGD/BGDL
ITEM	PART NO	*MAX	DWG SIZE	DESCRIPTION OR MATERIAL

CADAM SYSTEM DWG

DO NOT SCALE PRINT

TOLERANCES UNLESS OTHERWISE SPECIFIED

MACHINED HOLES

ANGLES

DRAWN JIM CAMERON 9-21-87
CHK G. JAY MCKOSKEY 11-30-87
APPROVED WM M. HOOPER 11-23-87

COMMERCIAL EMERALD

ONAN CORPORATION MINNEAPOLIS, MINNESOTA

TITLE CONTROL-GEN SET

DWG NO 611-1182 REV C

611-1184 C

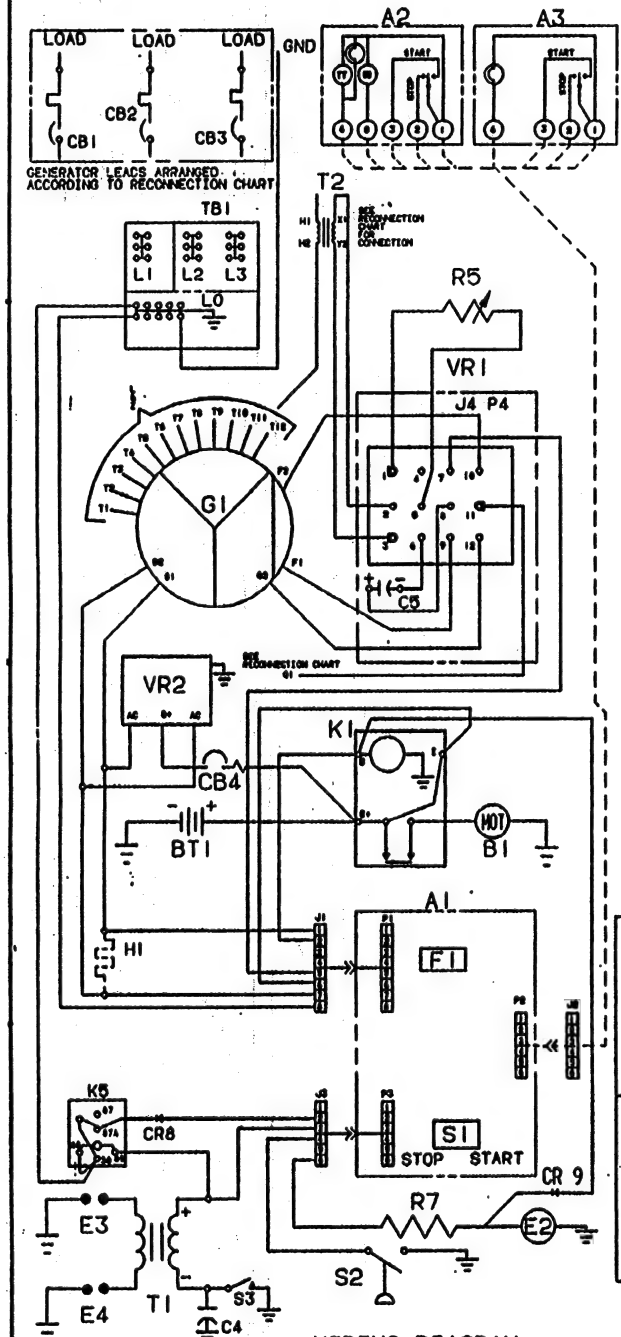

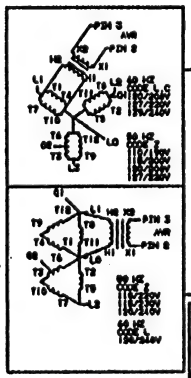

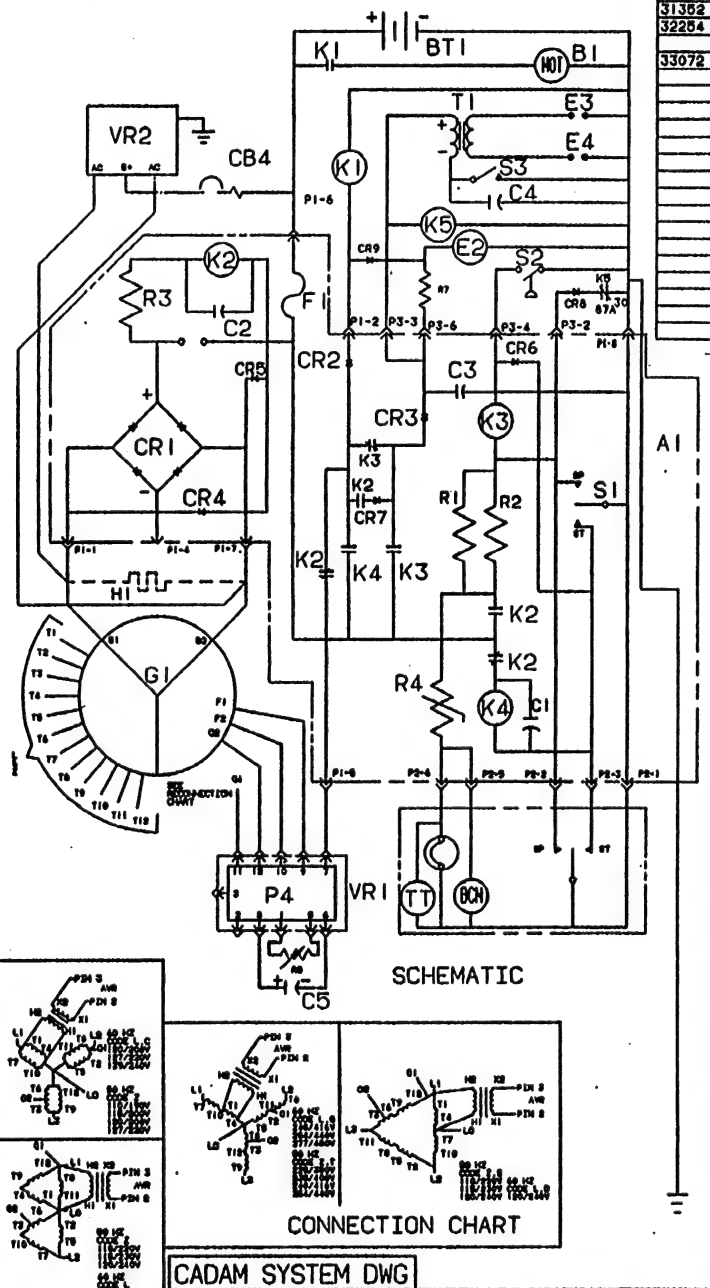

ER NO	LTR	NO	REVISION	ZONE	DR	CKHR	APPROVED	DATE
31352	A	1	PRODUCTION RELEASE	-	JC	RW	WMH	1-27-88
32254	B	1	ADD T2 TRANSFORMER	-	JC	GS	WMH	5-31-88
		2	CB4 WAS F2	-	JC	GS	WMH	5-31-88
33072	C	1	J4-1 CONNECTION WAS J4-4	4-C	GS	JC	WMH	10-20-88
		2	CR6 LEAD WAS TO P2-2, P3-2	2-C	GS	JC	WMH	10-20-88

611-1184 C

ITEM	PART NO	*BULK	REV LTR	QTY	DESCRIPTION OR MATERIAL
T2					TRANSFORMER VOLTAGE REC
CB4					CIRCUIT BREAKER(THERMAL)
VR2					VOLTAGE REGULATOR (DC)
CR8					RECTIFIER
VR1					VOLTAGE REGULATOR(AC)
S3					IGN POINTS
S2					SWITCH-LOW OIL PRESS
K5					RELAY
K1					RELAY-START SOLENOID
H1					CHOKE-GASOLINE ONLY
G1					GENERATOR
F1					FUSE-SLOW BLOW 5A
E3,4					SPARK PLUGS
E2					FUEL PUMP OR FUEL SOL
T1					IGN COIL
CB1,2,3					CIRCUIT BREAKER (AC OUTPUT)
C4,5					CAPACITOR
BT1					BATTERY 12V
B1					STARTER MOTOR
A3					REMOTE CONTROL-STANDARD
A2					REMOTE CONTROL-DELUXE
A1	300-3459-02		C	REF	CONTROL ASSY-NHD/NHDL
A1	300-3459-01		C	REF	CONTROL ASSY-BGD/BGDL

CADAM SYSTEM DWG

DO NOT SCALE PRINT

TOLERANCES UNLESS OTHERWISE SPECIFIED

	MM	INCH
	X. ±	.X ±
	.XX ±	.XX ±
	.XXX	.XXX ±
MACHINED HOLES	±.10	±.004
	±0.05	±.002
ANGLES		

SCALE OF

611-1184 C

	NAME	DATE
DR	JIM CAMERON	1-21-88
CHKR	G. J. MCKOSKEY	2-8-88
APPROVED	WM HOOPER	2-8-88

BGD, NHD

ONAN CORPORATION MINNEAPOLIS, MINNESOTA

TITLE CONTROL-GEN SET

DWG NO. 611-1184 REV LTR C

611-1186 C

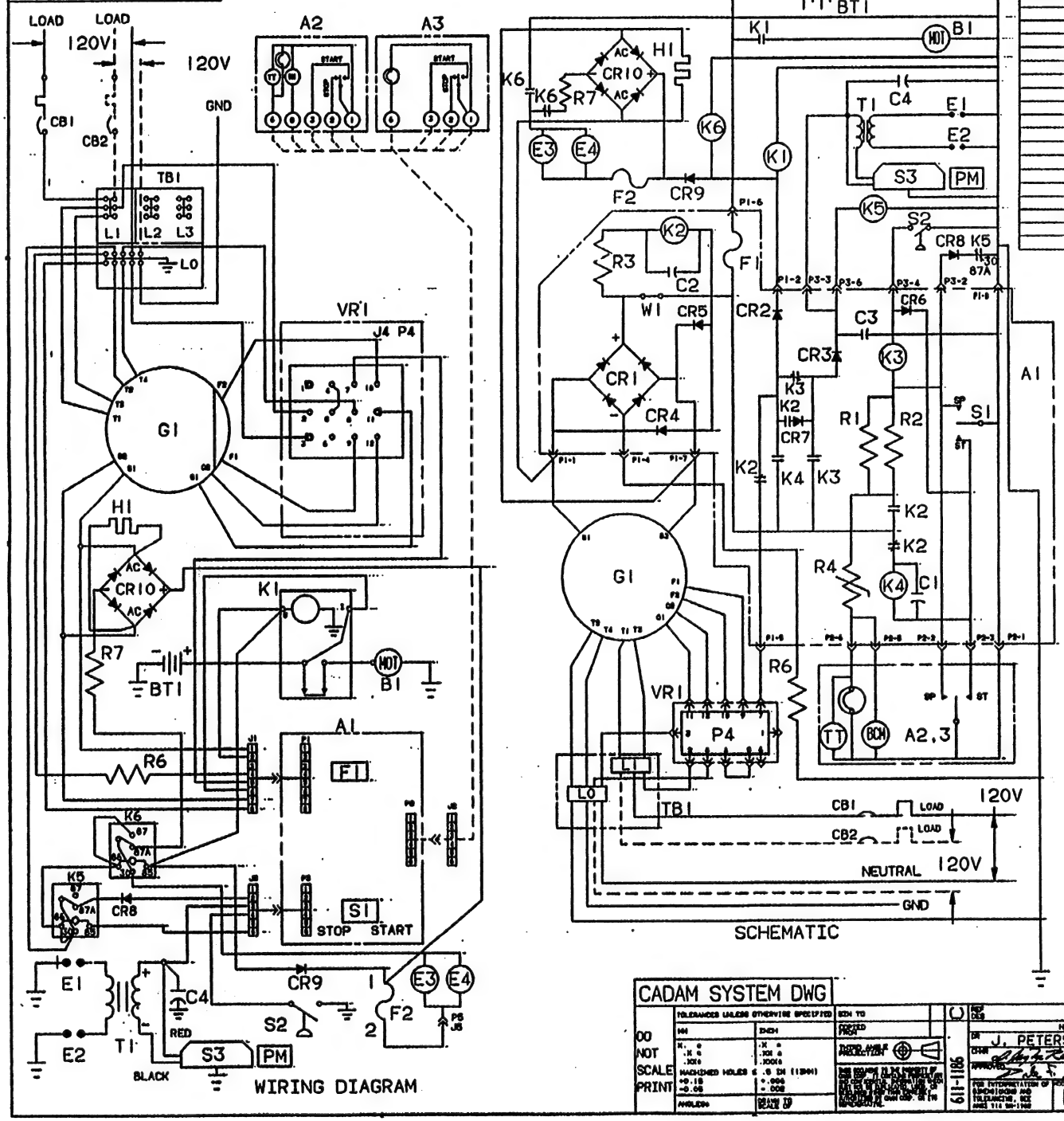

ER NO	LTR	NO	REVISION	ZONE	DR	CKHR	APPROVED	DATE
33251	A	1	SUPSDS 611-1186-XX W/FOLLOWING CHG	-	JP	KD	DFS	11-10-88
		2	REDRAWN ON CADAM W/CHNGS SEE ER	-	JP	KD	DFS	11-10-88
		3	PROD RELEASE	-	JP	KD	DFS	11-10-88

NOTES:

1. ALL ELECTRICAL COMPONENTS ARE DRAWN IN THE DE-ENERGIZED POSITION.

ITEM	PART NO	*BULK	REF DES	QTY	DESCRIPTION OR MATERIAL
VR1					VOLTAGE REGULATOR
T1					IGN COIL
S3					IGN MODULE
S2					SWITCH-LOW OIL PRESSURE
R7					RESISTOR-FUEL PUMP
R6					RESISTOR-BATTERY CHARGE
K6					RELAY-FUEL PUMP
K5					RELAY-STOP LATCH
K1					RELAY-START SOLENOID
H1					CHOKE-GASOLINE ONLY
G1					GENERATOR
F2					FUSE-SLOW BLOW 5A
F1					FUSE-SLOW BLOW 5A
E4					SOLENOID FUEL VALVE
E3					FUEL PUMP
E1,2					SPARK PLUG
CR10					RECTIFIER-FUEL PUMP POWER
CR9					RECTIFIER-FUEL PUMP
CR8					RECTIFIER-STOP LATCH
CB1,2					CIRCUIT BREAKER (AC OUTPUT)
C4					CAPACITOR
BT1					BATTERY 12V
B1					STARTER MOTOR
A3					REMOTE CONTROL-STANDARD
A2					REMOTE CONTROL-DELUXE
A1	300-3590-02	C	REF		CONTROL ASSY-NHM
A1	300-3590-01	C	REF		CONTROL ASSY-BGM

CADAM SYSTEM DWG

DO NOT SCALE PRINT

611-1186

DR J. PETERSON 11-10-88

CHKR 12-7-88

APPROVED 12-7-88

MARQUIS

ONAN CORPORATION MINNEAPOLIS, MINNESOTA

TITLE CONTROL-GEN SET

DWG NO 611-1186 REV C

612-6184 D

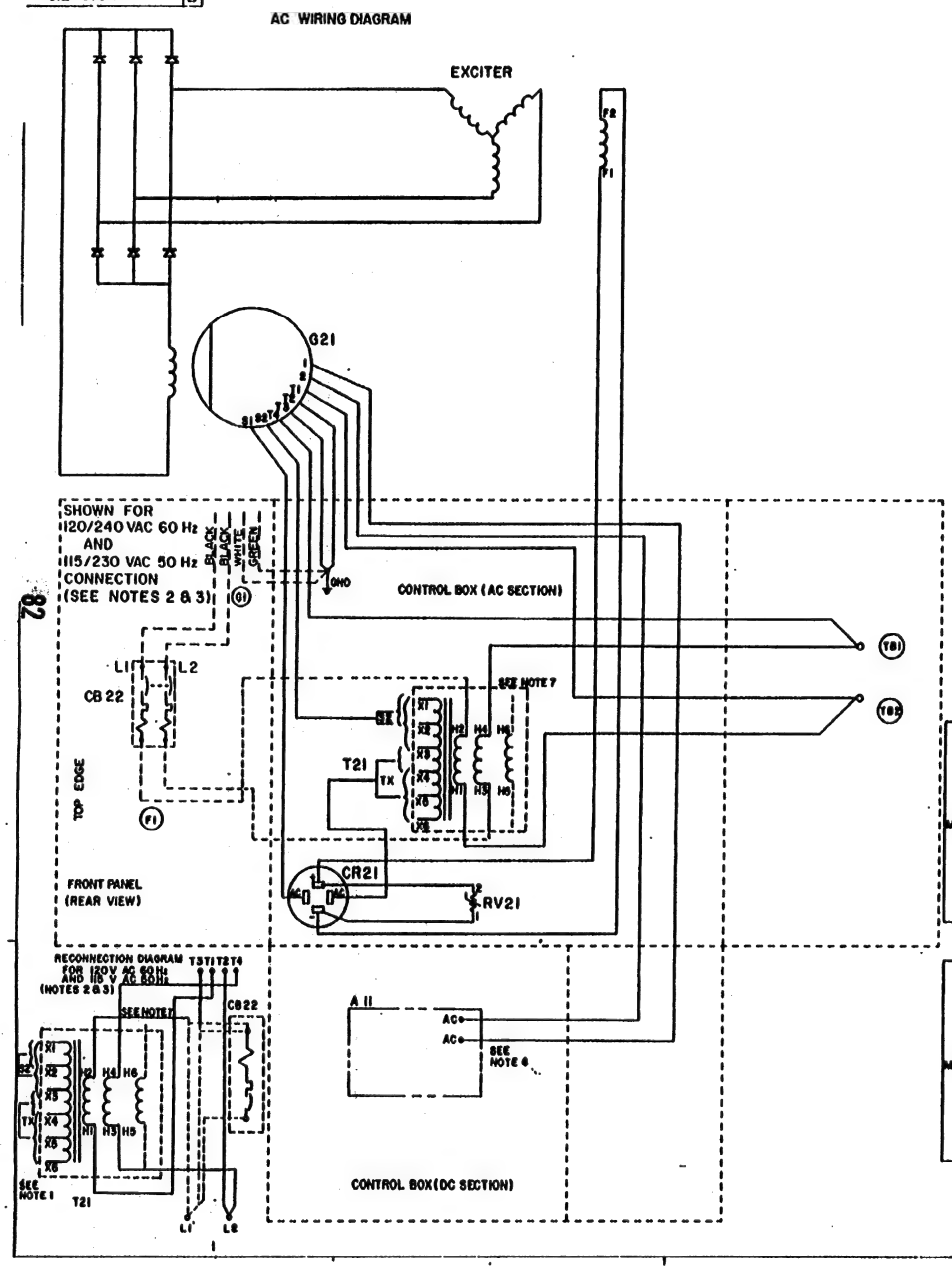

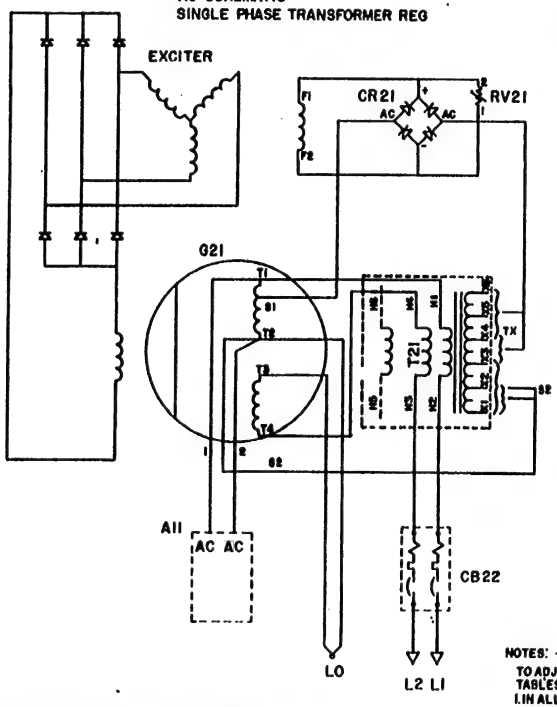

PARTS LIST - (ALL DASH NOS.)				
REF DES	PART NO.	INT.	QTY.	DESCRIPTION
A11	REF		1	PCB ASSY-ENGINE MONITOR (GAUGE)
CB22	REF		1	CIRCUIT BREAKER (LOAD)
CR21	305-0446	B	1	BRIDGE-RECTIFIER
G21	REF		1	GENERATOR (AC)
	336-1763	A	1	WIRING PACKAGE
T21,2	332-2370	P	2	STANDOFF-INSULATOR
RV21	305-0709	A	1	SUPPRESSOR ASSY
	816-0346	P	1	SCREW-RHM W/ET (10-32X5/8) (USE WITH 305-0446 BRIDGE)
	821-0004	-	4	SCREW-LK H(FLANGE) 10-32X5/16 (USE WITH T21)
	821-0008	-	2	SCREW-LK H(FLANGE) 1/4-20X5/16 (TO MOUNT 332-2370 STANDOFF)
	332-1864	A	2	TERMINAL-TAB .250 (USE ON BOTH A11-AC TERMINALS)
	337-0049	A	1	STRAP-BONDING
	900-0025	-	1	SCREW-HHC (5/16-18X5/8)
	848-0008	-	2	WASHER-EIY (5/16)
	900-0003	-	4	SCREW-HHC (1/4-20X1/2)
	842-0001	-	2	NUT (1/4-20)
	860-0040	-	4	WASHER-LK (1/4)
	828-0016	-	4	WASHER-FLAT (1/4)
T21	315-0871	C	1	TRANSFORMER-ASSY (60Hz)(-01)
T21	315-0862	C	1	TRANSFORMER-ASSY (50 HZ)(-02)
T21	315-0872	C	1	TRANSFORMER-ASSY (60HZ)(-03)
T21	315-0863	C	1	TRANSFORMER-ASSY (50HZ)(-04)

DKC MDKC	OUTPUT VOLTAGE ADJUSTMENT	60Hz (-01) 120,120/240V TAP POSITION S2	60Hz (-01) 120,120/240V TAP POSITION TX	50Hz (-02) 110,110/220V TAP POSITION S2	50Hz (-02) 110,110/220V TAP POSITION TX	50Hz (-02) 115,115/230V TAP POSITION S2	50Hz (-02) 115,115/230V TAP POSITION TX	50Hz (-02) 120,120/240V TAP POSITION S2	50Hz (-02) 120,120/240V TAP POSITION TX
	INCREASE	X2	X3	X3	X6	X3	X6	X3	X4
	STD	X1	X3	X2	X6	X2	X6	X2	X4
	DECREASE	X2 X1	X4 X4	X1	X6	X1	X6	X1	X4

DKD MDKD	OUTPUT VOLTAGE ADJUSTMENT	60Hz (-03) 120,120/240V TAP POSITION S2	60Hz (-03) 120,120/240V TAP POSITION TX	50Hz (-04) 110,110/220V TAP POSITION S2	50Hz (-04) 110,110/220V TAP POSITION TX	50Hz (-04) 115,115/230V TAP POSITION S2	50Hz (-04) 115,115/230V TAP POSITION TX	50Hz (-04) 120,120/240V TAP POSITION S2	50Hz (-04) 120,120/240V TAP POSITION TX
	INCREASE	X2 X1	X3 X3	X3	X6	X3	X6	X3	X4
	STD	X2	X4	X2	X6	X2	X5	X2	X4
	DECREASE	X1	X4	X1	X6	X1	X6	X1	X4

NOTES:

TO ADJUST OUTPUT VOLTAGE, MOVE TAPS ON T21 ACCORDING TO TABLES.

1. IN ALL VOLTAGE CONNECTIONS (50 AND 60Hz). LEAVE T1 AND T4 CONNECTED TO H1 AND H4 RESPECTIVELY.
2. FOR 60Hz: USE S2 LEAD (FROM GEN) ON TAPS X1-2 (4 TAPS) USE TX LEAD ON TAPS X3-4
3. FOR 50Hz: USE S2 LEAD (FROM GEN) ON TAPS X1-3 (6 TAPS) USE TX LEAD ON TAPS X4-6
   a. FOR 110/220V AND 110V CONNECT H2 TO H6. FOR 110V CONNECT H5 TO T3 (L1) AND H3 TO T2 (L2). FOR 110/220V USE H5 FOR L1 AND H3 FOR L2 (T2 AND T3 ARE GND)
   b. FOR 115/230V AND 115V INSULATE H5 AND H6 (NOT USED)
   c. FOR 120/240V AND 120V CONNECT H2 TO H5 FOR 120V CONNECT H6 TO T3 (L1) AND H3 TO T2 (L2). FOR 120/240V USE H6 FOR L1 AND H3 FOR L2 (T2 AND T3 ARE GND)
4. UNLESS OTHERWISE NOTED, ALL COMPONENTS ARE SHOWN IN THE DE-ENERGIZED POSITION.
5. DASHED LINES INDICATE WHEN USED.
6. A11 CONNECTION ON -3CR, -53CR MODELS ONLY. INSULATE LEADS ON -3CE, 53CE MODELS.
7. H5 AND H6 LEADS ARE USED ONLY ON 50Hz 110V, 110/220V AND 50Hz 120V, 120/240V CONNECTIONS.

REVISIONS					
26897	G	II	ADDED BLK, BLK, WHT, & GRN WIRES	6-C/K	9-11-85
26736	F	II	DEL. T1 & T4 LABELS	5-R/K	8-2-85
25444	E	II	REVISED NOTE 6	4-A/K	10-9-84
23435	D	II	ADDED CB22	3-A/K	8-2-83
22884	C	II	DELETED 301-0446	3-A/K	8-3-83
22884	B	II	REVISED NOTES 2 & 3	2-B/K	8-9-83
22151	A	II	WAS 336-1878	2-D/K	8-26-83
22151	-	II	RLSE FOR PROD	2-D/K	8-26-83
EX NO.	LTR		REVISION	ECNO	LTR	DATE

MODEL NO	60Hz	50Hz
DKC, MDKC	-01	-02
DKD, MDKD	-03	-04

Onan

TITLE CONTROL-GEN SET AC(1PH)

DWG NO. 612-6184 SHT 1 OF 1 REV D

612-6353 D

WIRING DIAGRAM

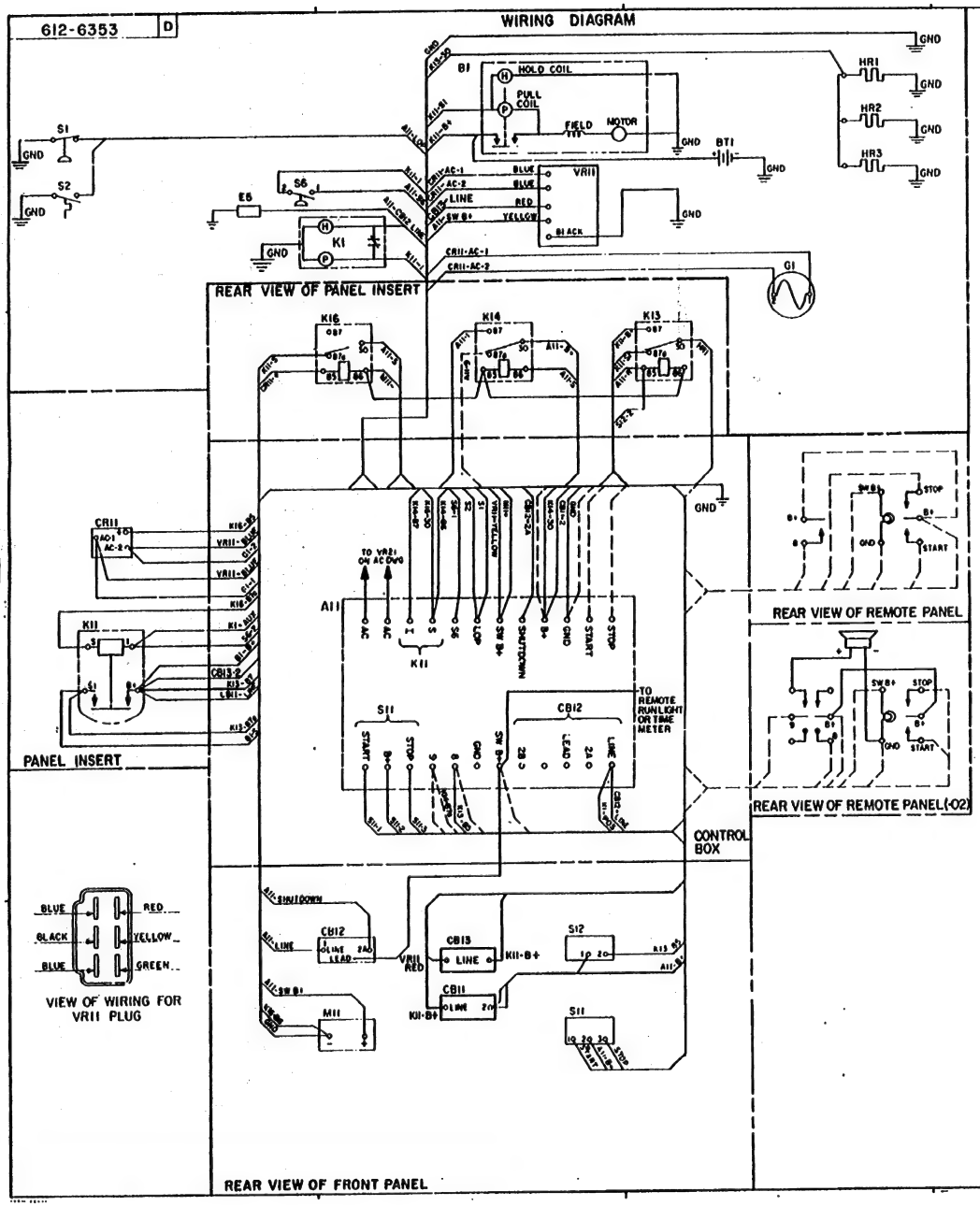

SCHEMATIC

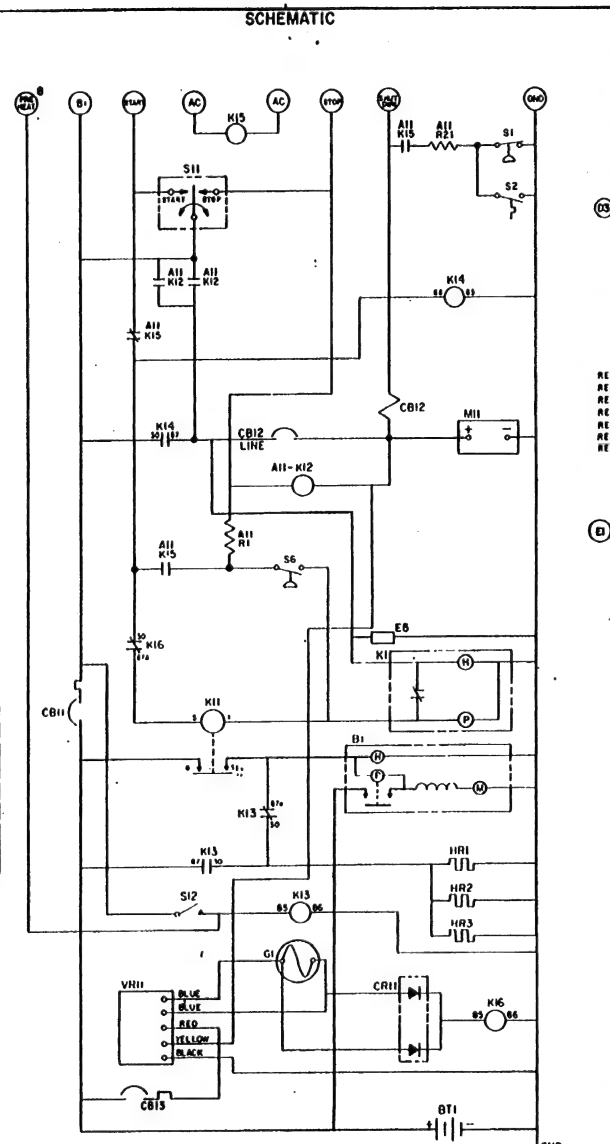

REF DES	PART NO.	LTR	QTY	DESCRIPTION
				ENG PARTS LIST (REF)
B1			1	STARTER & SOLENOID
BT1			1	BATTERY (12V)
HR1-3			3	HEATER-GLOW PLUG
E6				FUEL PUMP-ELECTRIC
K1			1	FUEL SOLENOID
S1			1	SWITCH-LOW OIL PRESSURE
S2			1	SWITCH-HIGH COOLANT TEMP
S6			1	SWITCH-CONTROL POWER LATCH
G1				ALTERNATOR
VR11				VOLTAGE REGULATOR
	CONTROL BOX PARTS LIST			
A11	300-2604	D	1	PCB ASSY-ENGINE MONITOR
CB11,13	320-1140	C	2	CIRCUIT BREAKER (CONTROL)
CB12	320-1141	A	1	CIRCUIT BREAKER (FAULT)
CR11	305-0548	P	1	BRIDGE-RECTIFIER
K11	307-1617	B	1	RELAY-START SOLENOID (STARTER)12V
REF A11-K12			1	RELAY-POWER
REF K13	307-1888	P	1	RELAY-HEATER (12V)
REF K14	307-1886	P	1	RELAY-FUEL SOLENOID
REF A11-K15			1	RELAY-STARTER PROTECTION
REF K16	307-1886	P	1	RELAY-START DISCONNECT
REF A11-R1			1	RESISTOR (K12)
REF A11-R2			1	RESISTOR (LOP TIMING)
M11	302-0685	A	1	METER-TIME TOTALIZING 4-40VDC
S11	308-0759	A	1	SWITCH-START STOP
S12	308-0770	A	1	SWITCH-PREHEAT
	508-0115	P	1	GROMMET (2 1/8 I.D.)
	508-0117	P	1	GROMMET (1 1/8 I.D.)
	518-0437	A	1	CLIP-HOLDDOWN (TINNERMAN)
	(INSTALL BEHIND CONTROL TRAY ON BOTTOM)			
	870-0398	A	4	CLIP NUT-RETAINING (10-32 TINNERMAN)
	(INSTALL ON TOP HOLES OF CONTROL BOX)			
	301-8453	B	1	BOX ASSY-CONTROL
	301-8454	D	1	TRAY-CONTROL
	301-8450	B	1	PANEL ASSY-CONTROL
	98-5104	B	1	SILKSCREEN-PANEL
	98-0994	A	1	SILKSCREEN-GND
	301-8421	C	1	PANEL-DC CONTROL
	338-1920-01	D	1	HARNESS-DC CONTROL -01
	338-1920-02	D	1	HARNESS-DC CONTROL -02
	338-1921	D	1	HARNESS-ENG
	815-0365	–	2	SCREW-RHM (6-32 X 1/2) (M11)
	870-0151	–	2	NUT-HEX W/ET (10-32)
	821-0004	–	13	SCREW-LK HD (10-32 X 3/8) (BOX ASSY)
	821-0012	–	1	SCREW-LK HD (1/4-20 X 1.125) (GND)
	871-0016	–	1	NUT-HUBB (GND)
	836-0006	–	2	WASHER-EXT LK (1/4-20) (GND)
	821-0008	–	2	SCREW-LK HD (1/4-20 X 3/8) (K11)
	815-0544	–	12	SCREW-RHM XREC W/ET (6-32 X 1/2)
	870-0183	–	2	NUT-W/ET (6-32) (M11)

ENO	LET	NO.	REVISION	ZONE	DR	EN	CK	DATE
26587	E	2	ADD CONT LABEL	3-A	JC	RW	RK	8-26-85
26587	E	1	REM 402-0527	2-C	JC	RW	RK	8-26-85
26231	D	3	REM 84, OVERSPEED	2-D	RW	RW	JC	5-15-85
26231	D	2	ADD -02	4-B	RW	RW	JC	5-15-85
26231	D	1	ADD REMOTE PANEL	4-C	RW	RW	JC	4-19-85
26087	C	1	UPDATE K13, K16	2-A	RW	RW	JC	3-26-85
25715	B	1	ADD CB13, S11, S12	—	JC	JC	RK	1-9-85
25564	A	1	PROD. RLSE	—	JC	JC	RW	12-18-84

Onan Corporation
Minneapolis, Minnesota

CONTROL-GEN SET DC
(WIRING DIAGRAM)

DKC, DKD 612-6353 D

-02
-01

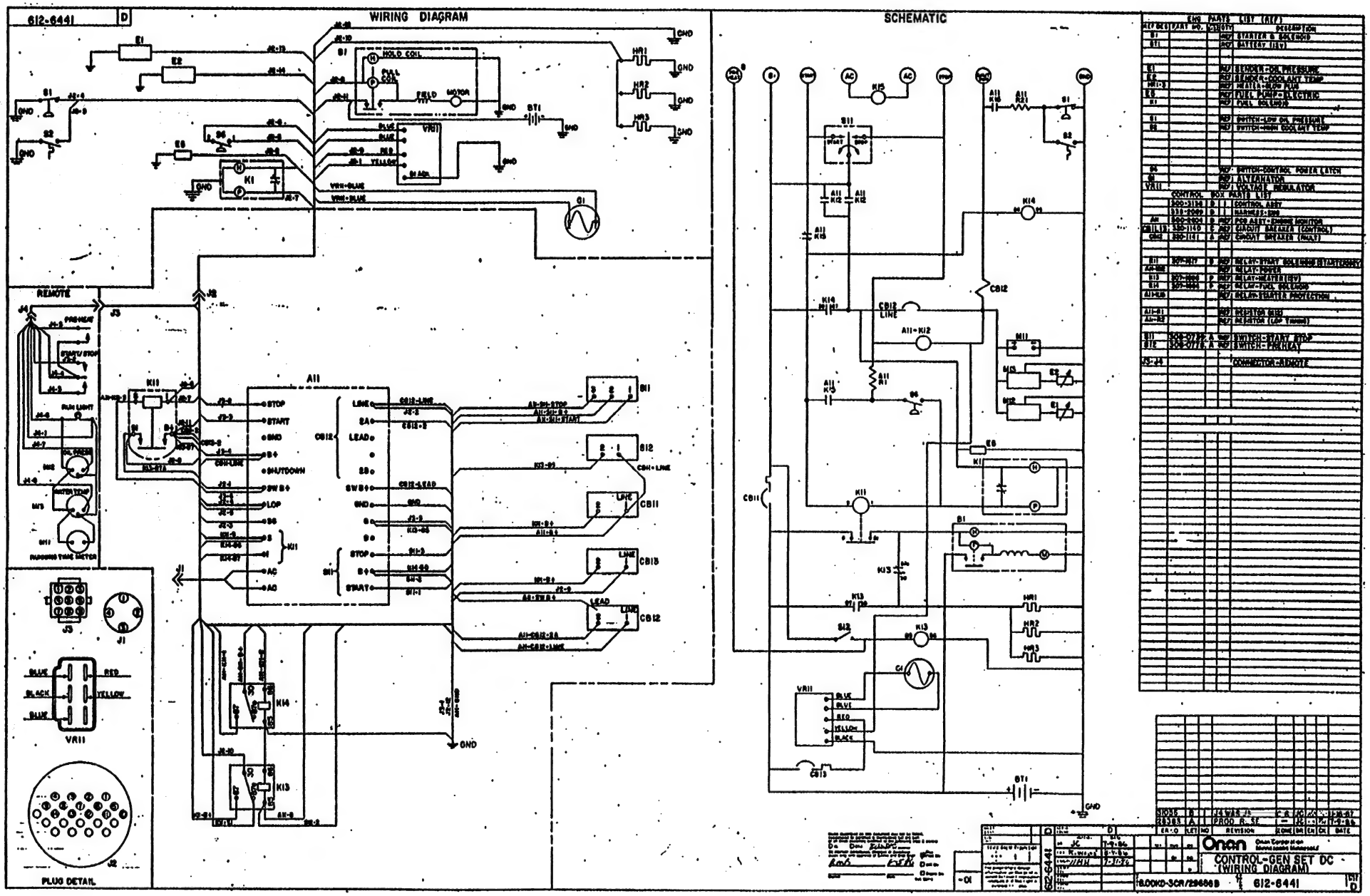
612-6441
WIRING DIAGRAM
SCHEMATIC
REMOTE
PLUG DETAIL
CONTROL-GEN SET DC
(WIRING DIAGRAM)
Onan
612-6441

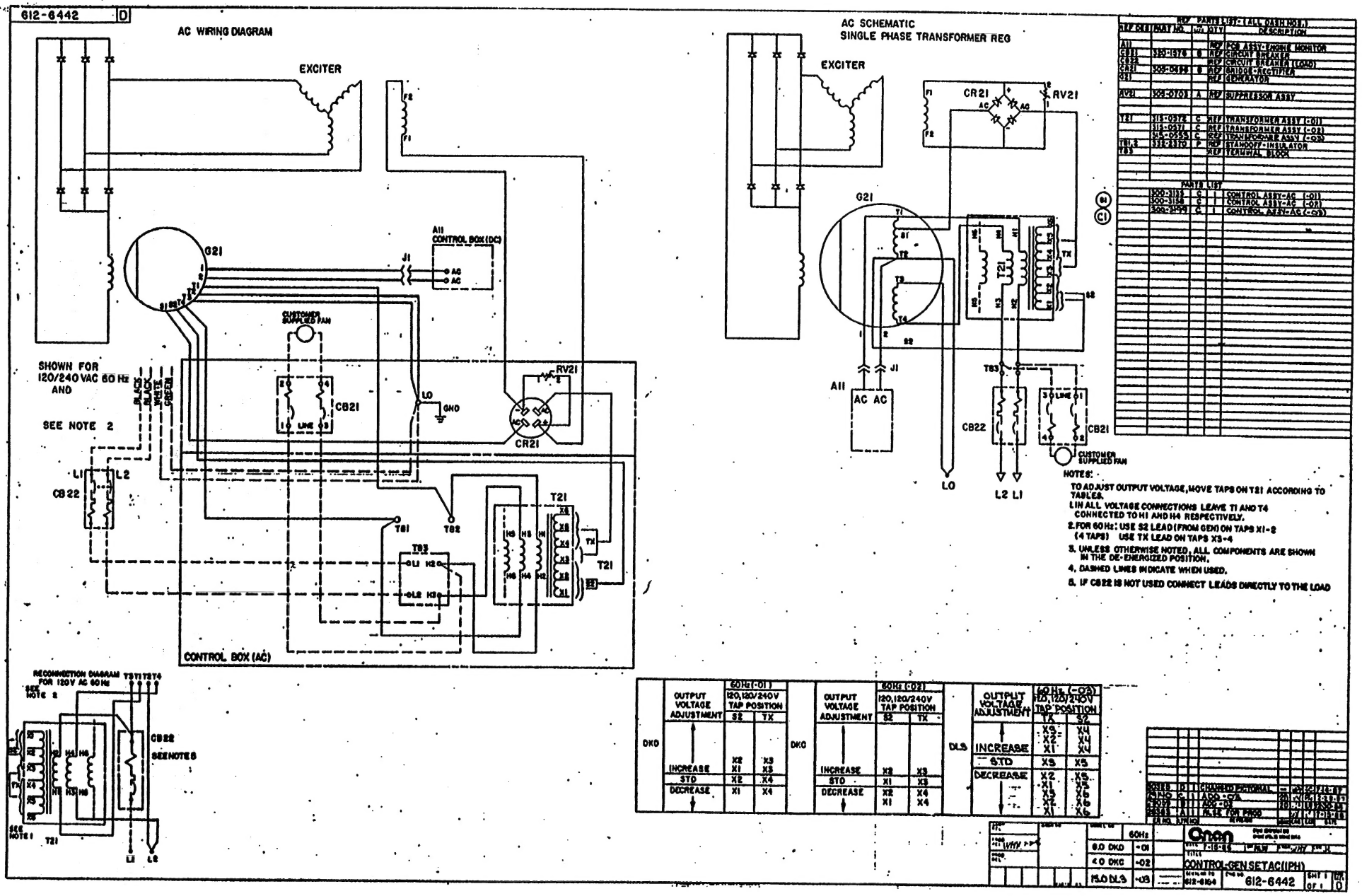
612-6442 D
AC WIRING DIAGRAM
EXCITER
G21
A11 CONTROL BOX (DC)
J1
CUSTOMER SUPPLIED FAN
SHOWN FOR 120/240 VAC 60 Hz AND
SEE NOTE 2
BLACK
BLACK
WHITE
GREEN
CB21
LINE
LO
GND
RV21
CR21
L1
L2
CB22
T81
T82
T83
T21
TX
CONTROL BOX (AC)
RECONNECTION DIAGRAM FOR 120V AC 60 Hz
SEE NOTE 2
CB22
SEE NOTE 6
SEE NOTE 1
AC SCHEMATIC
SINGLE PHASE TRANSFORMER REG
EXCITER
CR21
RV21
G21
T21
TX
A11
AC AC
J1
T83
CB22
CB21
LINE
CUSTOMER SUPPLIED FAN
LO
L2 L1
NOTES:
TO ADJUST OUTPUT VOLTAGE, MOVE TAPS ON T21 ACCORDING TO TABLES.
1. IN ALL VOLTAGE CONNECTIONS LEAVE T1 AND T4 CONNECTED TO H1 AND H4 RESPECTIVELY.
2. FOR 60 Hz: USE S2 LEAD (FROM GEN) ON TAPS X1-2 (4 TAPS) USE TX LEAD ON TAPS X3-4
3. UNLESS OTHERWISE NOTED, ALL COMPONENTS ARE SHOWN IN THE DE-ENERGIZED POSITION.
4. DASHED LINES INDICATE WHEN USED.
5. IF CB22 IS NOT USED CONNECT LEADS DIRECTLY TO THE LOAD
PARTS LIST - (ALL DASH NOS.)
REF DES | PART NO. | REV | QTY | DESCRIPTION
A11 | | | REF | PCB ASSY-ENGINE MONITOR
CB21 | 383-1576 | B | REF | CIRCUIT BREAKER
CB22 | | | REF | CIRCUIT BREAKER (LOAD)
CR21 | 305-0499 | B | REF | BRIDGE-RECTIFIER
G11 | | | REF | GENERATOR
RV21 | 305-0703 | A | REF | SUPPRESSOR ASSY
T21 | 315-0512 | C | REF | TRANSFORMER ASSY (-01)
315-0511 | C | REF | TRANSFORMER ASSY (-02)
315-0553 | C | REF | TRANSFORMER ASSY (-03)
TB1,2 | 318-2310 | P | REF | STANDOFF-INSULATOR
TB3 | | | REF | TERMINAL BLOCK
PARTS LIST
300-3155 | C | 1 | CONTROL ASSY-AC (-01)
300-3158 | C | 1 | CONTROL ASSY-AC (-02)
300-3159 | C | 1 | CONTROL ASSY-AC (-03)
OUTPUT VOLTAGE ADJUSTMENT
60Hz (-01) 120,120/240V TAP POSITION S2 TX
INCREASE X2 X3 / X1 X3
STD X2 X4
DECREASE X1 X4
60Hz (-02) 120,120/240V TAP POSITION S2 TX
INCREASE X2 X3
STD X1 X3
DECREASE X2 X4 / X1 X4
60Hz (-03) 120,120/240V TAP POSITION TX S2
INCREASE X3 X4 / X2 X4 / X1 X4
STD X3 X5
DECREASE X2 X5 / X1 X5 / X5 X5 / X2 X6 / X1 X6
DKO
DLS
60Hz
6.0 DKO -01
4.0 DKC -02
15.0 DLS -03
Onan
CONTROL-GEN SET AC (1PH)
612-6442
SHT 1 OF 1
REV D

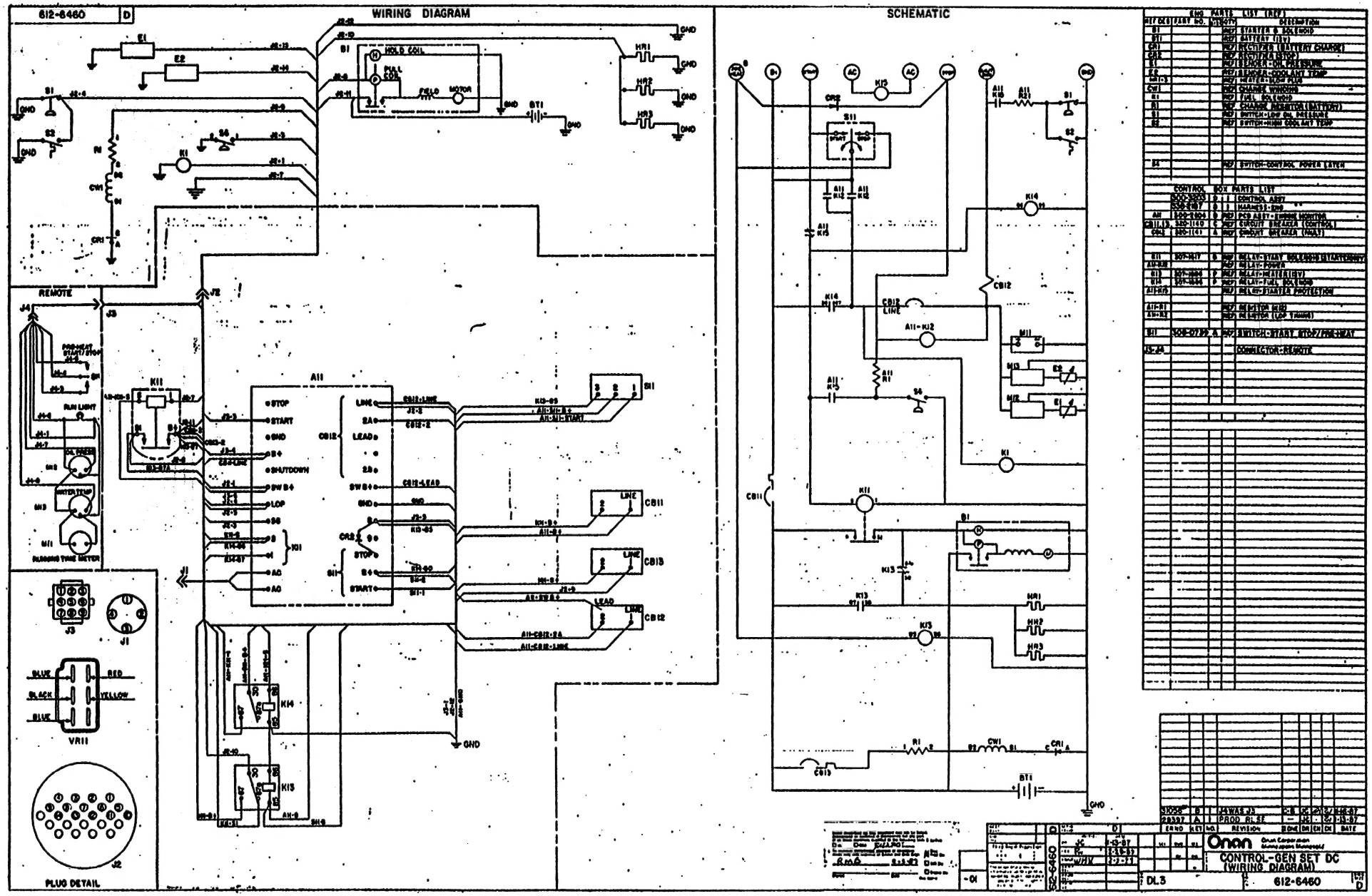
612-6460 D
WIRING DIAGRAM
SCHEMATIC
REMOTE
PLUG DETAIL
CONTROL-GEN SET DC (WIRING DIAGRAM)
Onan
DL3
612-6460

Onan

Onan Corporation
1400 73rd Avenue N.E.
Minneapolis, MN 55432
1-800-888-ONAN
612-574-5000 International Use
Telex: 275477
Fax: 612-574-8087

Onan is a registered trademark of Onan Corporation